FINE CONTROLS (UK) LTD

Fine Controls have been supplying process controls & instrumentation equipment since 1994, & now serves an ever expanding customer base, both in the UK & globally.

We offer a full range of valve & instrumentation products & services, with our product rangerepresenting leading technologies & brands:

Flow: Flow Meters & Transmitters, Flow Switches, Flow Control Valves & Batch Control Systems

Temperature: Temperature Probes & Thermowells, Temperature ransmitters,Temperature Regulators & Temperature Displays

Level: Level Transmitters & Switches

Pressure: Pressure Gauges &Transmitters, Precision & High Pressure Regulators & I-P Converters, Volume boosters.

Precision Pneumatics: Pressure Regulators, I-P Converters, Volume Boosters, Vacuum Regulators

Valves: Solenoid & Pneumatic Valves, Control Valves & Positioners, Actuated Ball, Globe or Diaphragm Valves & Isolation Valves

Services: Repair, Calibration, Panel Build, System Design & Commissioning

A rotork Brand FAIRCHILD

bürkert

SIEMENS

alcon SOLENOID VALVES A rotork Brand

MIDLAND-ACS A rotork Brand

Honeywell

Bourdon Baumer Group

SOLDO CONTROLS A rotork Brand

Fine Controls (UK) LTD, Bassendale Road, Croft Business Park,
Bromborough, Wirral, CH62 3QL UK
Tel: 0151 343 9966
Email: sales@finecontrols.com

Operating Instructions

Bedienungsanleitung
Instructions de Service

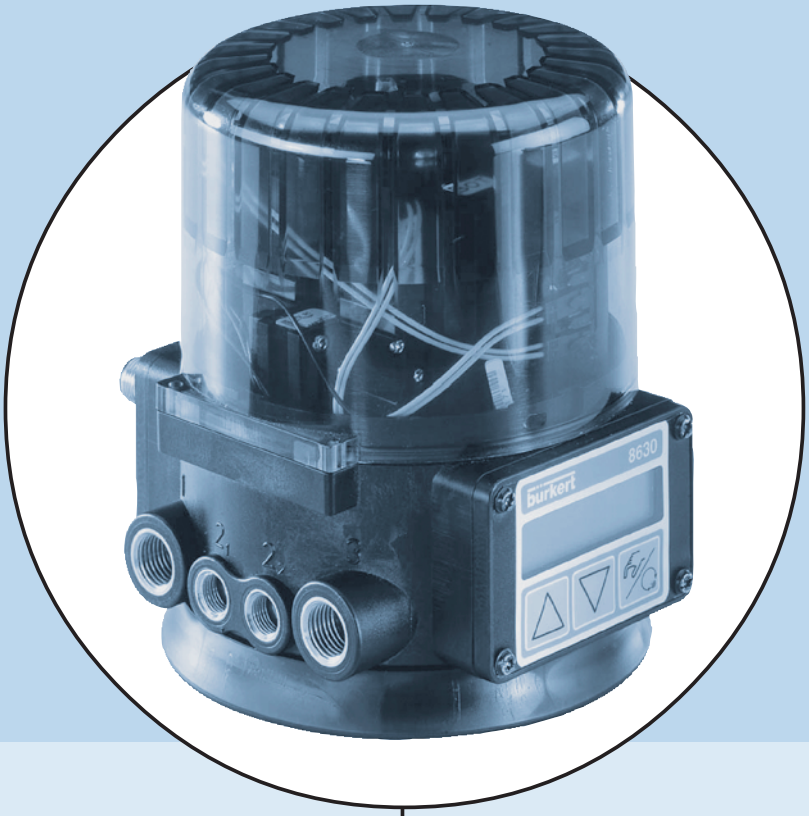

Type 8630

TOP Control Continuous

MAN 1000010084 EN Version: K Status: RL (released | freigegeben) printed: 23.04.2009

bürkert
Fluid Control Systems

MAN 1000010084 EN Version: K Status: RL (released | freigegeben) printed: 23.04.2009

Operating Instructions 0507/11_EU-EN_00804575

Overall Operating Instructions
TOP Control Continuous 8630

GENERAL NOTES

SYSTEM DESCRIPTION

MAN 1000010084 EN Version: K Status: RL (released | freigegeben) printed: 23.04.2009

* *Alternative chapters or functions depending on device configuration*

FIRST COMMISSIONING

INSTALLATION

MAN 1000010084 EN Version: K Status: RL (released | freigegeben) printed: 23.04.2009

** Alternative chapters or functions depending on device configuration*

OPERATION AND CONTROLLER FUNCTIONS

** Alternative chapters or functions depending on device configuration*

MAN 1000010084 EN Version: K Status: RL (released | freigegeben) printed: 23.04.2009

OPERATING THE PROCESS CONTROLLER

PROFIBUS DP

MAN 1000010084 EN Version: K Status: RL (released | freigegeben) printed: 23.04.2009

DEVICE NET

MAN 1000010084 EN Version: K Status: RL (released | freigegeben) printed: 23.04.2009

MAINTENANCE AND ERROR CORRECTION ON THE POSITIONER

MAINTENANCE AND ERROR CORRETION ON THE PROCESS CONTROLLER

Appendix

GENERAL RULES

OPERATING STRUCTURE

TABLE FOR POSITIONER

TABLE FOR PROCESS CONTROLLER

MASTER CODE

MAN 1000010084 EN Version: K Status: RL (released | freigegeben) printed: 23.04.2009

GENERAL NOTES

MAN 1000010084 EN Version: K Status: RL (released | freigegeben) printed: 23.04.2009

Symbols

The following symbols are used in these operating instructions:

→ marks a work step that you must carry out.

ATTENTION! marks notes on whose non-observance your health or the functioning of the device will be endangered.

NOTE marks important additional information, tips and recommendations.

Intended use

In order for the device to function perfectly and have a long service life, you must observe the information given in these operating instructions and comply with the operating conditions and the permissible data for the TOP Control Continuous, in addition to the information for the respective pneumatically actuated valve, which is specified in the „Technical Data“ chapter of these instructions and in the valve instructions.
Please note that the Top control Continuous may not be used out-of-doors.
In view of the large number of possible applications and categories of use, you should check whether the Top control Continuous is suitable for your specific application, and carry out tests where necessary.

Safety notes

- Keep to standard engineering rules in planning the use of and operating the device!
- Installation and maintenance work are only allowed by specialist personnel using suitable tools!
- Observe the current regulations on accident prevention and safety during operation and maintenance of the device!
- Switch off the supply voltage in all cases before intervening in the system!
- Note that in systems under pressure, piping and valves may not be loosened!
- Take suitable precautions to prevent inadvertent operation or damage by unauthorized action!
- Make sure that after an interruption to the electrical or pneumatic supply, the process starts up again in a well-defined, controlled manner!
- On non-observance of these notes and unauthorized interference with the device, we will refuse all liability and the warranty on device and accessories will become void!

MAN 1000010084 EN Version: K Status: RL (released | freigegeben) printed: 23.04.2009

Protection from damage by electrostatic charging

ATTENTION
EXERCISE CAUTION ON HANDLING!
ELECTROSTATICALLY SENSITITVE COMPONENTS/MODULES

This device contains electronic components that are sensitive to electrostatic discharge (ESD). Contact to electrostatically charged persons or objects will endanger these components. In the worst case, they will be immediately destroyed or will fail after commissioning.

Observe the requirements of EN 100 015 - 1 in order to minimize the possibility of, or avoid, damage from instantaneous electrostatic discharge. Also take care not to touch components that are under supply voltage.

Scope of delivery

Immediately after receipt of a shipment, make sure that the contents are undamaged and match the scope of delivery stated on the packing slip. In general this consists of:

- Pneumatically actuated valve of type 2652, 2655, 2672, 2700, 2712, 2730, 2731 or 2731K with attached TOP Control Continuous,
- Operating Instructions for the TOP Control Continuous and for the valve with pneumatic actuation.

If there are discrepancies, please contact immediately our customer service:

Bürkert Fluid Control Systems
Chr.-Bürkert-Str. 13-17
Service Department
D-76453 Ingelfingen
Tel.: (07940) 10-111
Fax: (07940) 10-448
E-Mail: info@de.buerkert.com

NOTE Suitable cable plugs for the multipole connection are available as accessoires.

Warranty conditions

This document contains no warranty promises. We refer in this connection to our General Conditions of Sale and Business. The condition for the warranty is use of the unit for the intended purpose under the specified application conditions.

ATTENTION!

The warranty covers only faultless condition of the TOP Control Continuous and the attached valve with pneumatic actuation. No liability will be accepted for consequential damage of any kind that may arise from failure or malfunctioning of the device.

MAN 1000010084 EN Version: K Status: RL (released | freigegeben) printed: 23.04.2009

Master Code

Operation of this device can be locked by means of a freely selectable user code. Independent of this, there exists an unchangeable master code with which you can execute all operative actions on the device. This 4-digit code is to found on the last page of these operating instructions.

If required, cut out this code and keep it separate from these operating instructions.

Transport, storage

ATTENTION!

Transport and store the appliance in its original packing only.

Disposal

ATTENTION!

When disponsing of the appliance, observe the national standards for refuse disposal.

MAN 1000010084 EN Version: K Status: RL (released | freigegeben) printed: 23.04.2009

SYSTEM DESCRIPTION

MAN 1000010084 EN Version: K Status: RL (released | freigegeben) printed: 23.04.2009

***** Alternative chapters or functions depending on device configuration**

By the combination of the TOP Control with pneumatically actuated process valves, the functionality of the Bürkert process valve series is extended. These valves, in connection with the TOP Control, may also be employed in those control applications requiring continuous behaviour of the actuator.

Valve types

The figure below gives an overview of the possible combinations of TOP Control and various pneumatically actuated valves. For each type, various actuator sizes and valve sizes are available (not shown). More detailled information is to be found on the respective data sheets. The product range is being extended continually.

TOP Control
Continuous
Type 8630

with flat-seat valve
Type 2712
(here with flange connection)

with Y-valve Type 2700

with butterfly valve
Type 2672

TOP Control
Continuous
Type 8630

with ball valve
Type 2655

with diaphragm valve
Type 2730

Various process valves from the Bürkert range can be combined with the TOP Control to suit different applications. Y-, diaphragm or ball valves with control cones are suitable.

Pneumatically driven piston and rotary actuators may be used to operate them. Both single-acting and double-acting actuators are offered in combination with TOP Control Continuous.

With single-acting actuators, only one chamber in the actuator is pressurized and vented. The pressure produced works against a spring. The piston moves until an equilibrium is set up between the pressure and the spring force.

With double-acting actuators, the chambers on both sides of the piston are pressurized. When the one chamber is pressurized, the other is vented and vice versa. No spring is installed in this actuator version.

Characteristics of the valve types

	Y-valves **Flat seat valves**	**Diaphram valves**	**Ball valves**	**Flap valves**
Types	• 2700 • 2712	• 2730 (plastic) • 2731 (metal) • 2731K (pipe housing)	• 2652 (2-part,VA) • 2655 (3-part,VA) • 2658 (plastic)	• 2672 (metal) • 2675 (plastic)
Characteristic	• Inlet flow under seat • Non-impact closure • Straight flow of medium • Self-adjusting packed gland for very tight seal	• Medium is hermetically separated from actuator and the ambient • Self-draining housing design without dead spaces • Either flow direction with low turbulence flow • May be steam sterilized • CIP compatible • Non-impact closure • Actuator and diaphragm are detachable with the housing	• Piggable • Low and dead space • insensitive to contamination • Lower pressure loss than with other valve types • with 3-part ball valve, seat and seal can be exchaged while installed <u>Note</u> Only usable as process controller.	• insusceptible to dirt • less pressure loss compared to other valve types • good value for money • smaller volume
Typical media	• Water, steam and gases • Alcohols, oils, fuels, hydraulic fluides • Salt solutions, lyes (organic) • Organic solvents	• Neutral gases and liquids • contaminated, abrasive and aggressive media • high purity or sterile media • high viscosity media	• Neutral gases and liquids • pure water • slightly aggressive media	• Neutral gases and fluides • slightly aggressive media

MAN 1000010084 EN Version: K Status: RL (released | freigegeben) printed: 23.04.2009

Construction of TOP Control Continuous

Illustrations (cover removed)

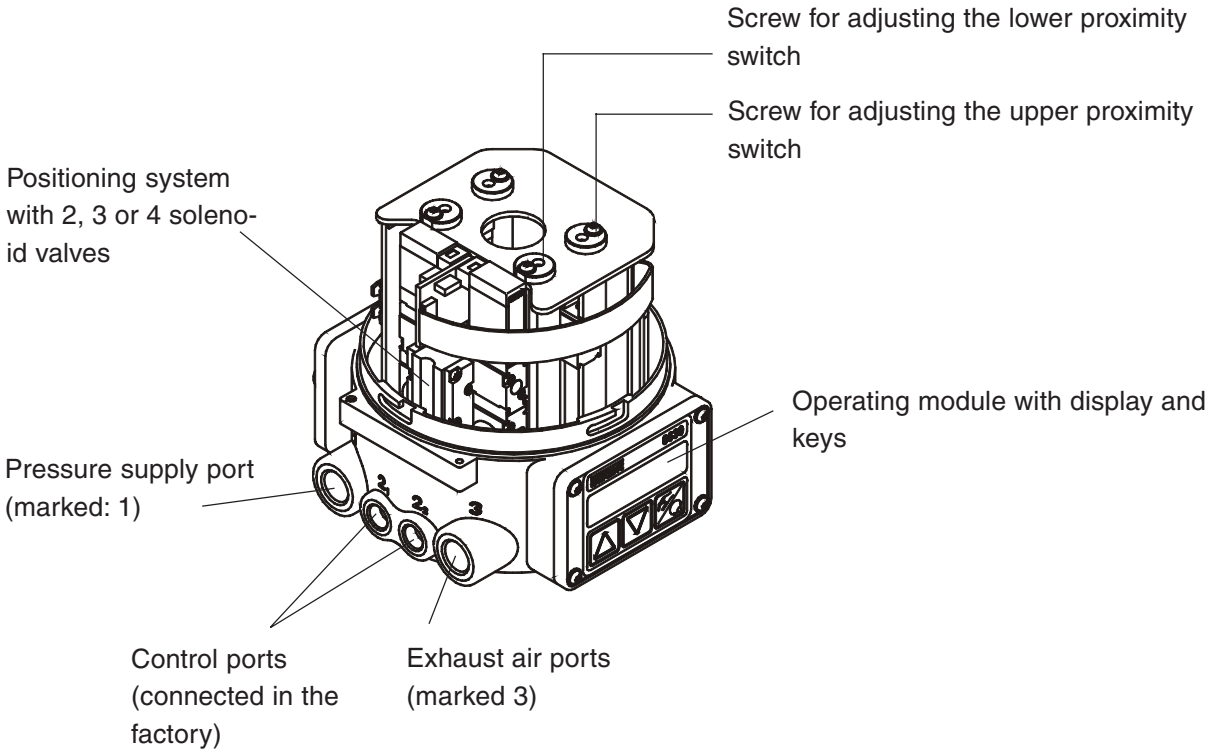

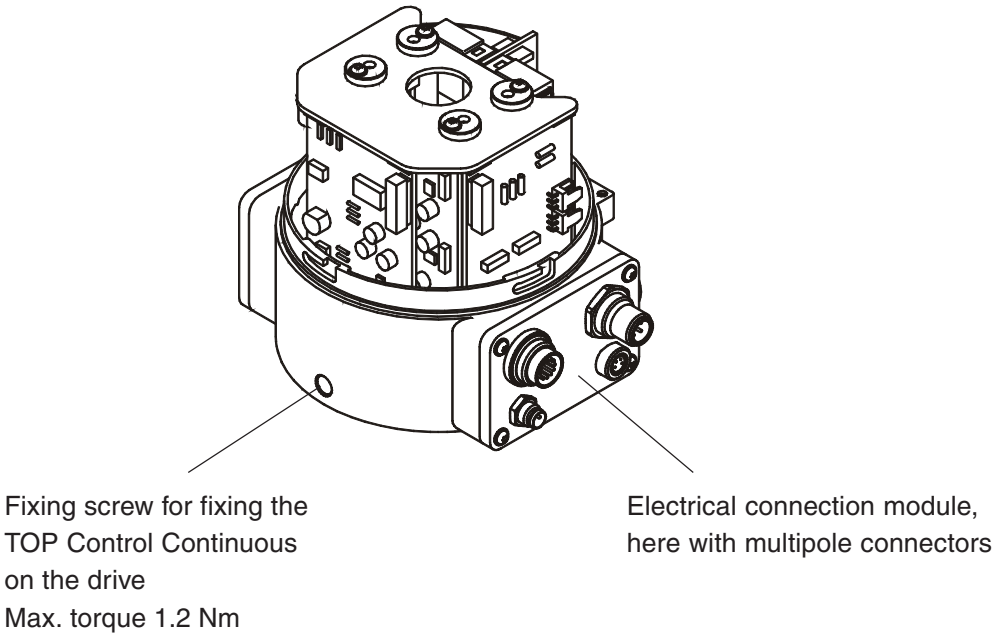

MAN 1000010084 EN Version: K Status: RL (released | freigegeben) printed: 23.04.2009

Design features

- **Versions**
  for single and double acting valve actuators
- **Position sensor**
  very high resolution conductive plastic potentiometer, coupled without play to the piston rod of the pneumatic actuator
- **Microprocessor controlled electronics**
  for signal processing, control and driving the valve
- **Operating module**
  The device is operated via 3 keys. 8-digit, 16-segment LC display for showing the setpoint or actual value and for configuration and parametrization via menu functions.
- **Positioning system**

  With single-acting actuators, the positioning system consists of 2 solenoid valves; with double-acting actuators of four solenoid valves. With single-acting actuators, one valve serves to pressurize the pneumatic piston drive and another to exhaust it. Double-acting actuators contain 2 valves for pressurization and 2 for exhausting.The solenoid valves work on the rocker principle and are driven via the controller with a PWM voltage. This enables great flexibility with regard to actuator volumes and floating speed. For larger pneumatic actuators, the solenoid valve are equipped with diaphragm boosters.

  As an option, with single-acting actuators, there are fast pressurizing/exhaust variants with an additional pressurizing valve and an additional exhaust valve. These enable the actuator to be completely pressurized and exhausted more rapidly. This is used with the tight-closure function (see section "*CUTOFF*") and on activation of a safety position of 0 or 100% (see section "*BIN-IN*").
- **Position repeater (optional)**

  2 inductive proximity switches (initiators) or mechanical limit switches.
  Attainment of an upper or lower position of the valve can be relayed via binary outputs e.g. to a PLC.
  The end settings on the initiators can be adjusted by the owner by means of setscrews.

- **Pneumatic interfaces**

  1/4”- connectors in various threads
  (G, NPT, RC)
- **Electrical interfaces**

  Multipole plug connector or cable bushing

- **Housing**

  The housing of the TOP Control is protected by a pressure relief valve from excessive internal pressure, e.g. resulting from leaks.

  The cover may be secured against unauthorized opening with a lead seal or with a self-tapping screw.

MAN 1000010084 EN Version: K Status: RL (released | freigegeben) printed: 23.04.2009

Fuctional diagram as a positioner with single-acting actuator

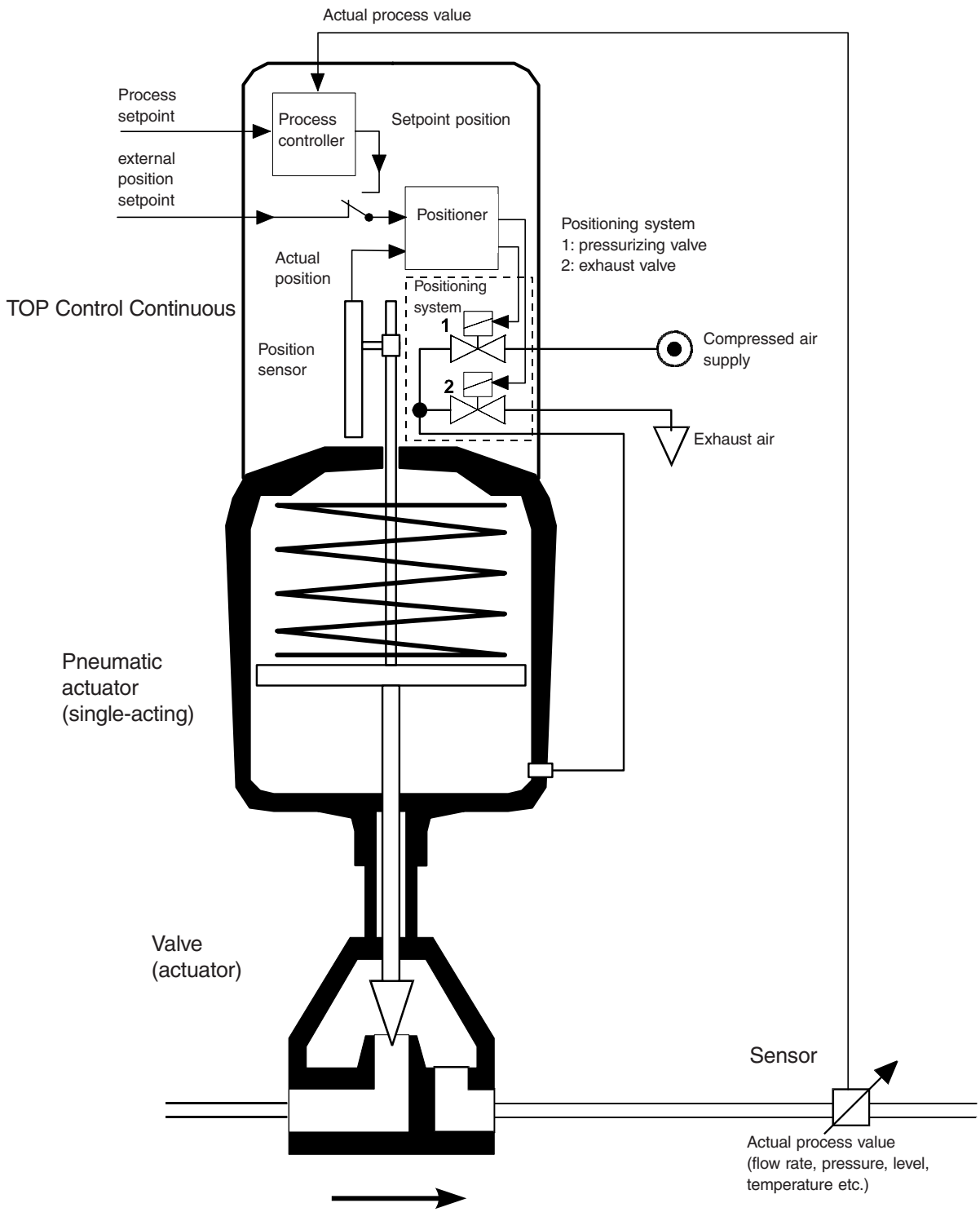

MAN 1000010084 EN Version: K Status: RL (released | freigegeben) printed: 23.04.2009

Operating as a positioner

The actual position (POS) of the pneumatic actuator is measured via the position sensing system. The controller compares this actual value of the position with the setpoint (CMD) , which can be specified as a standard signal. If a control difference (Xd1) exists, a pulse-width modulated voltage signal is sent to the positioning system as the correcting variable. With single-acting actuators, if the difference is positive, the pressurizing valve is driven via output B1; if it is negative, the exhaust valve is driven via output E1. In this way, the position of the actuator is altered until the control difference is zero. Z1 represents a disturbance.

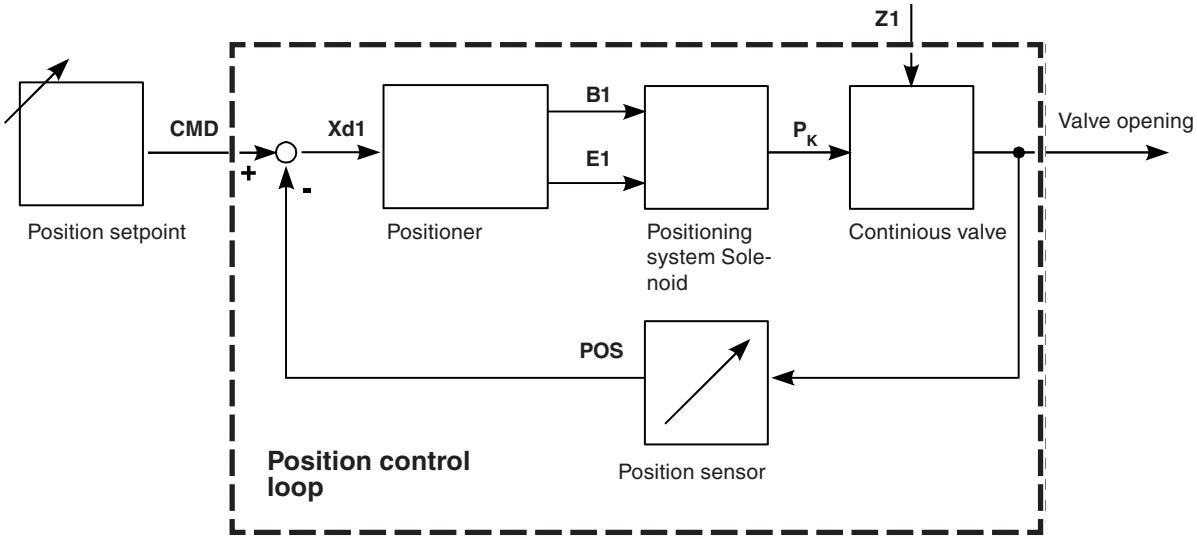

MAN 1000010084 EN Version: K Status: RL (released | freigegeben) printed: 23.04.2009

Schematic representation of positioning control

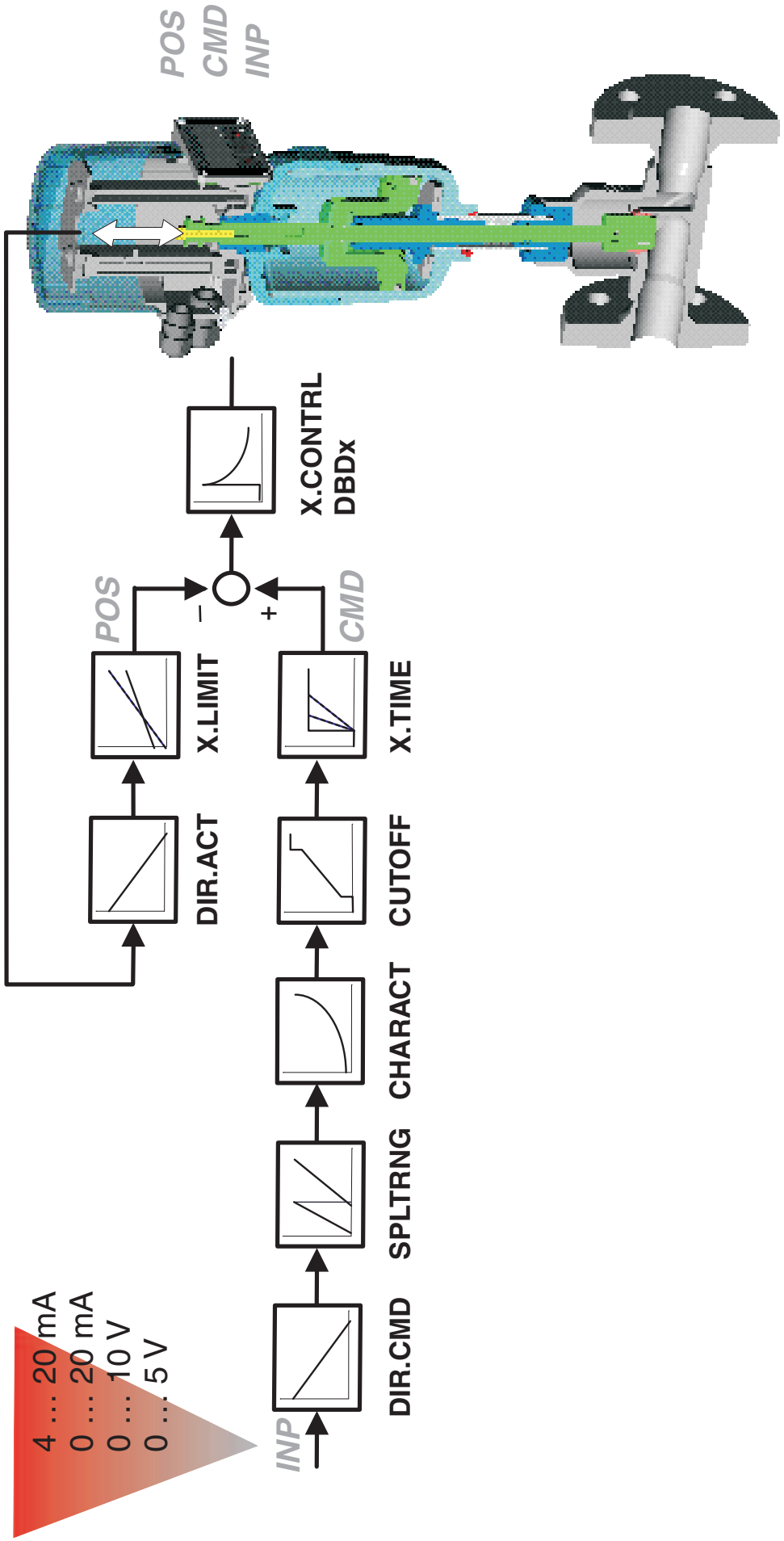

Characteristics of the positioner software

Supplementary function	Effect
Positioner with supplementary functions	
Tight-closing function	Valve closes tight outside control range. A value is given (at %) from which the actuator is completely exhausted (at 0%) or pressurized (at 100 %).
Stroke limitation	Mech. valve piston movement only withhin a specified stroke range.
Signal range splitting	Splitting of the standard signal range over two or more TOP Control Continuous.
Correction characteristic to match the operating curve	Linearization of the process characteristic can be performed.
Insensitivity range	The positioner cuts in only above a specified control difference.
Direction of action of the controller setpoint	Reversal of the setpoint action direction
Safety position	Valve moves to a specified safety position.

Hierarchical concept for simple operation with the following levels	
Process operation	In this level your switch between automatic and manual operation.
Configuration	In this level you specify on commissioning certain basic functions and configure supplementary functions as needed.

MAN 1000010084 EN Version: K Status: RL (released | freigegeben) printed: 23.04.2009

* Operation as a process controller (option)

On operation of the TOP Control Continuous as a process controller, the abovementioned position control becomes a subordinate auxiliary control loop; the result is a cascade control. The process controller in the main loop of the TOP Control Continuous has a PID function. The setpoint specified is the process setpoint (SP) and it is compared with the process variable to be controlled. The actual position (XPOS) of the pneumatic actuator is measured via the position sensing system. The controller compares this actual value of the position with the setpoint (CMD) , which can be specified as a standard signal. If a control difference (Xd1) exists, a pulse-width modulated voltage signal is sent to the positioning system as the correcting variable. With single-acting actuators, if the difference is positive, the pressurizing valve is driven via output B1. If it is negative, the exhaust valve is driven via output E1. In this way, the position of the actuator is altered until the control difference is zero. Z2 represents a disturbance.

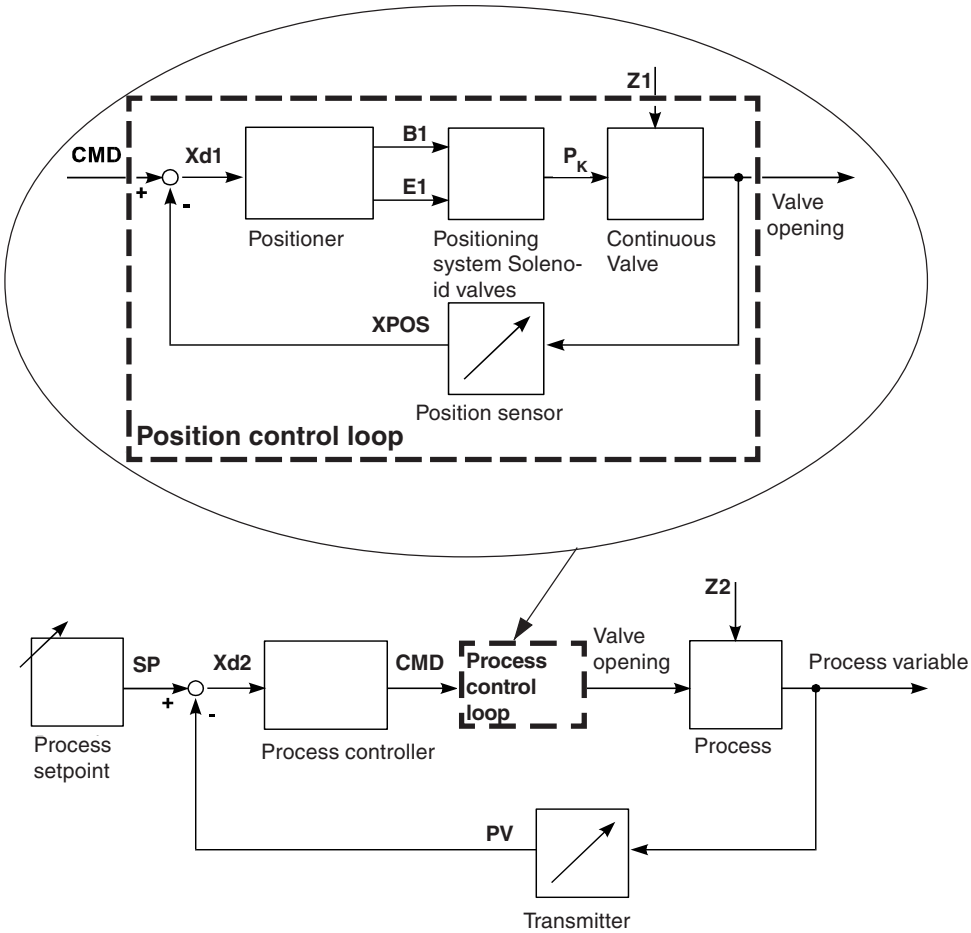

Example of process control: TOP Control Continuous with sensor

MAN 1000010084 EN Version: K Status: RL (released | freigegeben) printed: 23.04.2009

Schematic representation of process control

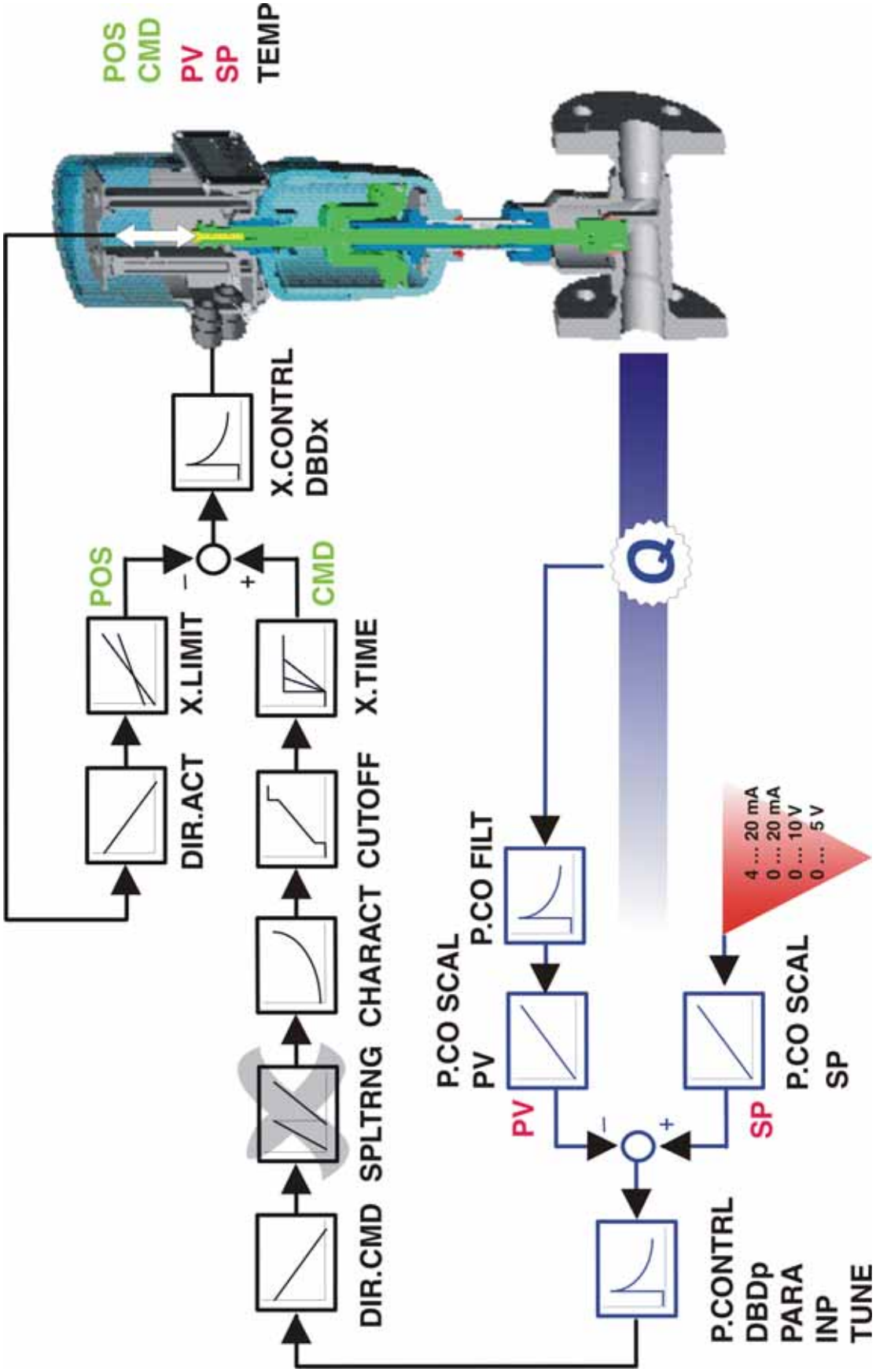

Characteristics of the process controller software

Supplementary function	Effect
Positioner with supplementary functions	
Tight-closing function	Valve closes tight outside control range. A value is given (at %) from which the actuator is completely exhausted (at 0%) or pressurized (at 100%).
Stroke limitation	Mech. valve piston movement only within a specified stroke range.
Signal range splitting	Splitting of the standard signal range over two or more TOP Control Continuous.
Correction characteristic to match the operating curve	Linearization of the process characteristic can be performed.
Insensitivity range	The positioner cuts in only after a specified control difference.
Direction of action of the controller setpoint	Reserval of the setpoint action direction
Safety position	Valve moves to a specified safety position
Analog feedback (option)	Feedback of the position/process values Binary outputs
Connectable process controller with the following characteristics (Option)	
Controller structure	PID
Parameters that can be set	Proportional action factor, reset time, rate time and operating point
Scalable input	Decimal point position, upper and lower sacle valures of process value and setpoint
Method of setpoint setting	Setting either via standard signal input or via keys

Hierarchical concept for simple operation with the following levels	
Process operation	In this level your switch between automatic and manual operation.
Configuration	In this level you specify on commissioning certain basic functions and configure supplementary functions as needed.

MAN 1000010084 EN Version: K Status: RL (released | freigegeben) printed: 23.04.2009

* Operation as a flow rate controller (option)

The flow rate controller is a special type of process controller. The process value (PV) is not measured directly via an analog input but calculated in the device by the dp method. According to the algorithm, the flow rate is dependent on the parameters *pressure before valve* (p1), *pressure after valve* (p2), *medium temperature* (T) and the *kv* value. For this reason, the **TOP Control Continuous FMR** has inputs for 2 pressure transmitters and a temperature transmitter which can be optionally connected.

One pressure transmitter measures the pressure before the valve and a second one after the valve. The temperature is either entered manually in the operating menu or is provided as a standard signal by a temperature transmitter. The kv value is determined internally from the current position of the control valve. For this purpose, a kv characteristic curve is provided in the control valve used.

The density of the medium is entered via the operating menu.

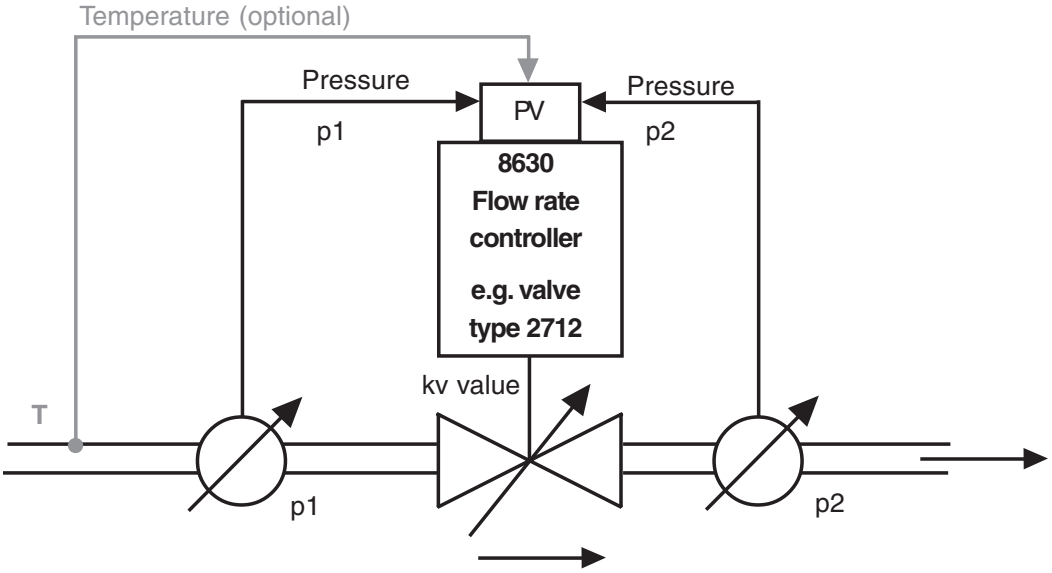

In the case of the flow rate controller, the process parameters are either the volumetric flow rate or, for special applications, the transport velocity at the end of a pumping section.

The volumetric flow rate is represented in m^3/h STP, i.e. referred to 0 °C (medium temperature) and a gas pressure of 1013 mbar (abs).

There are special applications for flow rate controllers in which a pumping section is set up after the valve, in which bulk goods enter via an airlock. These bulk goods are blown through the pumping section by the pumping pressure that builds up behind the valve.

The transport velocity corresponds to the volumetric flow rate of the medium, referred to the piping diameter of the pumping section. However, it is not specified for standard conditions, but reflects the velocity of the gas particles at the existing medium temperature. The diameter is entered in the operating menu.

Characteristics of the flow rate controller software

The flow rate controller offers the same functions as the process controller.

MAN 1000010084 EN Version: K Status: RL (released | freigegeben) printed: 23.04.2009

MAN 1000010084 EN Version: K Status: RL (released | freigegeben) printed: 23.04.2009

Schematic representation of process control with flow rate controller

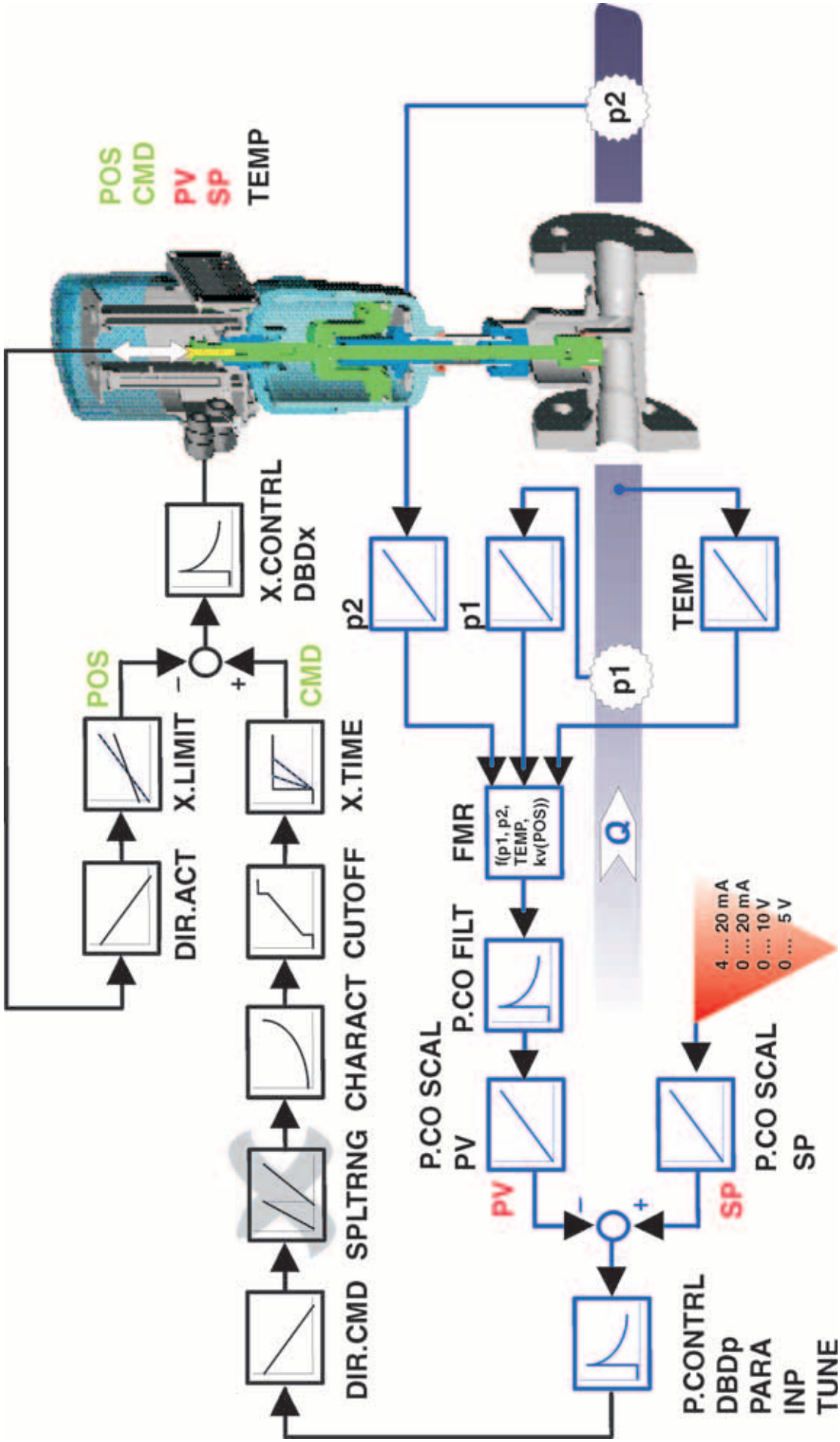

* Interfaces of the TOP Control Continuous in the multipole variant

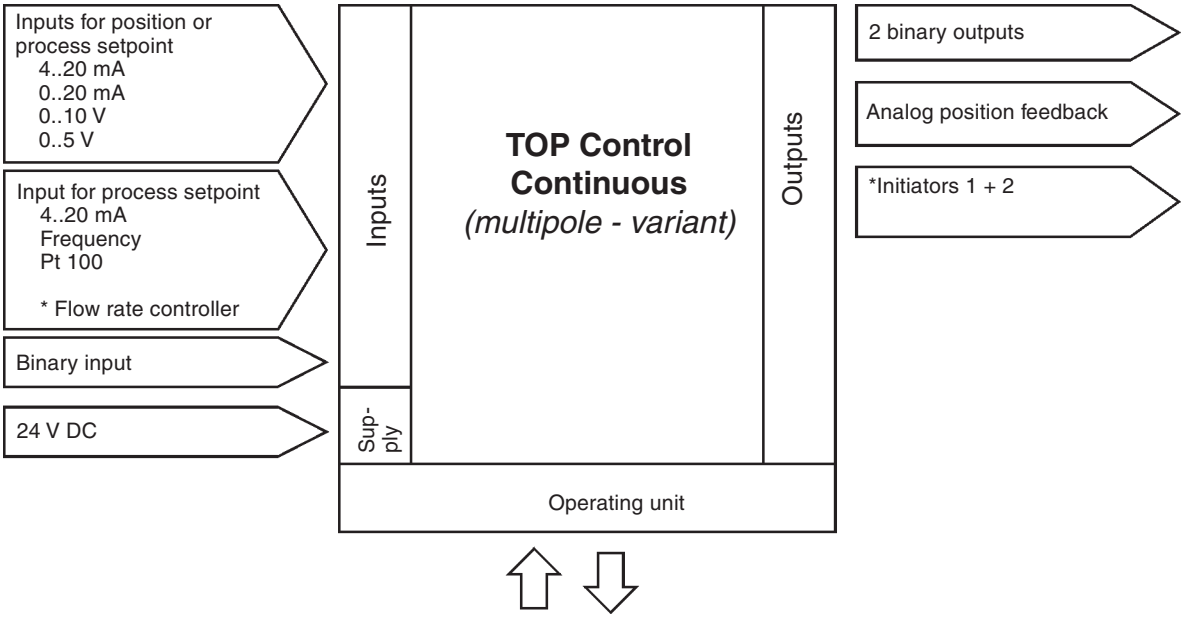

*** Note:**

Inputs for process value with flow rate controller (option): p_1, p_2, T (optional).

The standard process controller inputs (4 ... 20 mA, frequency, Pt 100) and the initiators cannot be used with this option.

NOTE TOP Control Continuous Type 8630 is a 3-conductor device, i.e. the voltage supply (24 V DC) is separate from the setpoint signal.

MAN 1000010084 EN Version: K Status: RL (released | freigegeben) printed: 23.04.2009

* Interface of the TOP Control Continuous in the variants with cable bushings

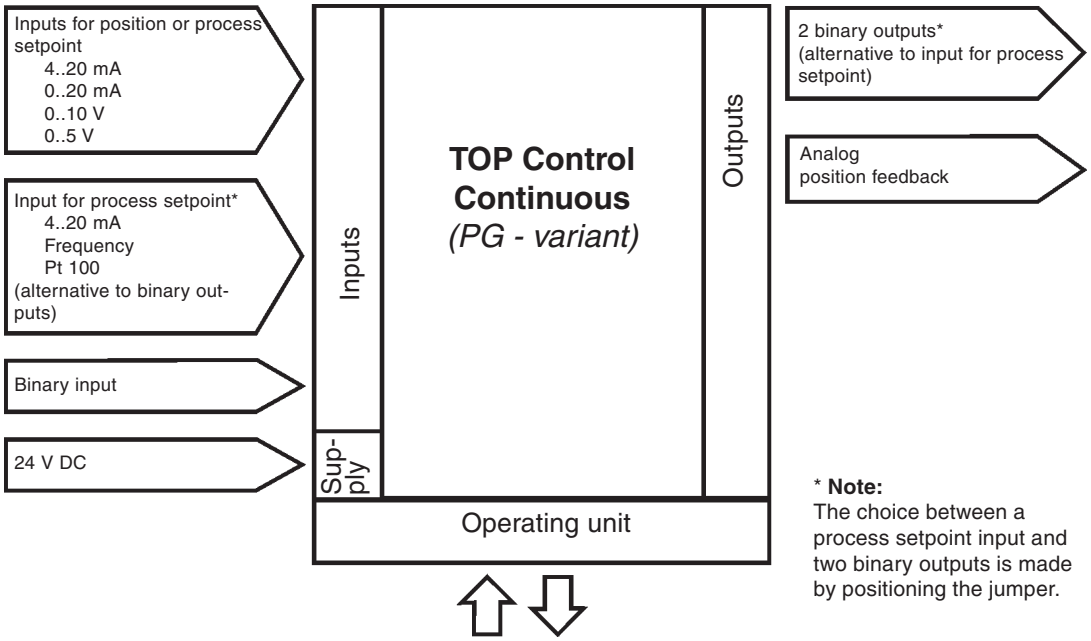

NOTE TOP Control Continuous Type 8630 is a 3-conductor device, i.e. the voltage supply (24 V DC) is separate from the setpoint signal.

MAN 1000010084 EN Version: K Status: RL (released | freigegeben) printed: 23.04.2009

Technical data

Safety settings on failure of auxiliary electrical or pneumatic energy

Actuator type	Designation	Safety position after failure of auxiliary energy	
		Electrical	Pneumatic
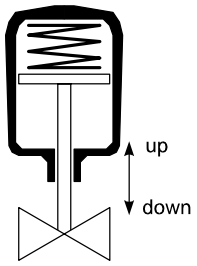	Single-acting SFA	down	down
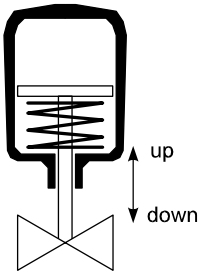	Single-acting SFB	up	up
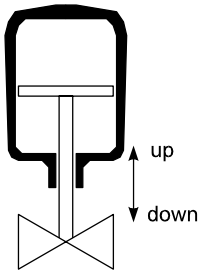	Double-acting SFI	down / up (depending on connection of control conductors)	undefined

MAN 1000010084 EN Version: K Status: RL (released | freigegeben) printed: 23.04.2009

Factory settings on the TOP Control Continuous

Function	Factory setting
ACTFUNC	*FUNCSNGL*
INPUT	*INP 4'20 A*
CHARACT	*CHA LIN*
DIR.CMD	*DIR.CRISE*
CUTOFF	*CUT* ⊥ 0 %, *CUT* ⊤ 100 %
DIR.ACT	*DIR.ARISE*
SPLTRNG	*SR* ⊥ 0 (%), *SR* ⊤ 100 (%)
X.LIMIT	*LIM* ⊥ 0 %, *LIM* ⊤ 100 %
X.TIME	
T.OPN	Values calculated by *AUTOTUNE*
T.CLS	Values calculated by *AUTOTUNE*
After execution of *SETFACT*: 1 s	
OUTPUT	
OUT ANL:	
OUT POS	*OUT 4´20 A*
OUT BIN:	
OUT DEV	*DEV 5.0 NO*
BIN-IN	
B.IN SPOS	*SPOS 000 NO*

Function	Factory setting
X.CONTRL	
X.CO DBND	*1 %*
X.CO PARA	
KX ⊤	Values calculated by *AUTOTUNE*
KX ⊥	Values calculated by *AUTOTUNE*
After execution of *SETFACT*: 1	
P.CONTRL	
P.CO DBND	*1 %*
P.CO PARA	
KP	*1.00*
TN	*999.9*
TV	*0.0*
X0	*0*
P.CO SETP	*SETP INT*
P.CO INP	*INP 4´20 A*
P.CO FILT	*0*
P.CO SCAL	*PV* ⊥ *000.0, PV* ⊤ *100.0*
P.CO TUNE	*D'ACT*
P.CO KV	*FACT*
P.CONTRL with flow rate controller	
P.CO DBND	*1 %*
P.CO PARA	
KP	*1.0*
TN	*999.9*
TV	*0.0*
X0	*0*
P.CO SETP	*SETP INT*
P.CO INP	*INP P1'P2*
P.CO FILT	*0* ⊥ ⊤
P.CO SCAL	*PV 000.0, PV 100.0*
P.TYP	*FLOW*
UNIT	*M3/H*
TEMP	*MAN*
DENS	*1.293*
DIAM	*0025*
P.CO TUNE	*D'ACT*
P.CO KV	*FACT*
CODE	*CODE 0000*

NOTE The functions and factory settings shown in grey are valid for the optional flow rate control.

MAN 1000010084 EN Version: K Status: RL (released | freigegeben) printed: 23.04.2009

Data of the TOP Control Continuous

OPERATING CONDITIONS

Permissible ambient temperature	- 10 ... + 50 °C	
Protection type cable or	IP 65 to EN 60529	(only with correctly connected plug and socket)

ATTENTION!

The TOP Control Continuous is not suitable for outdoor use.

CONFORMITY TO THE FOLLOWING STANDARDS

CE	conformity wer. EMC Guideline 89/336/EWG

MECHANICAL DATA

Dimensions	see data sheet
Housing material TOP Control	outer: Noryl (PPE/PA), PSU, inner: PA 6
Dichtmaterial	NBR

ELECTRICAL DATA

Connections	Choice between multipole connector or 3 bushings M 16 x 1.5 with screw terminals 0.14 ... 1.5 mm²
Voltage supply	24 V DC ± 10 % residual ripple 10 % **No industrial DC!**
Power consumption	< 5 W
Housing internal temperature indication	- 55 ... + 125 °C, accuracy ± 2 °C
Input resistance for actual value signal	180 Ω at 4 - 20 mA/resolution 12 bit 17 kΩ at frequency, 0 ... 1000 Hz / 1‰ of mean > 300 V_{ss} sinus, square-wave, sawtooth PT-100 - 20 ... + 220 °C, resolution < 0.1 °C
Input resistance for setpoint signal	180 Ω at 0/4 - 20 mA/resolution 12 bit 19 kΩ at 0 - 5/10 V /resolution 12 bit
Protection class	3 to VDE 0580
Analog position feedback: max. current for voltage output 0 ... 5/10 V	10 mA
max. burden for current output 0/4 ... 20 mA	560 Ω
Inductive proximity switch current limitation	100 mA

MAN 1000010084 EN Version: K Status: RL (released | freigegeben) printed: 23.04.2009

Binary outputs	electrically isolated
current limitation	100 mA, output is clocked
Binary input	electrically isolated 0 ... 5 V = log "0", 10 ... 30 V = log "1" inverted output reversed accordingly

PNEUMATIC DATA

Control medium	Qualitiy Classes to DIN ISO 8573-1
Dust content	Class 5 max. particle size 40 µm, max. particle density 10 mg/m³
Water content	Class 3 max.pressure dew point - 20 °C or min. 10 deg. below the lowest operating temperature
Oil content	Class 5 max. 25 mg/m³
Temperature range of compressed air	-10 ... + 50 °C
Pressure range	3 ... 7 bar
Supply pressure variation	max. ± 10 % during operation
Air flow capacity of control valve	100 l_N / min STP (for pressurizing and exhausting) (Q_{Nn} - value acc. to definition on pressure drop from 7 to 6 bar abs.)
Intrinsic air consumption with zero control output	0.0 l_N/min STP
Connections	G 1/4” internal thread G / NPT / RC

MAN 1000010084 EN Version: K Status: RL (released | freigegeben) printed: 23.04.2009

FIRST COMMISSIONING

MAN 1000010084 EN Version: K Status: RL (released | freigegeben) printed: 23.04.2009

***** Alternative chapters or functions depending on device configuration**

NOTE This section enable you to put the TOP Control Continuous rapidly into operation for a functional check. Supplementary functions unnecessary for this purpose are not dealt with here.

Fluidic installation

➔ Install the valve according to operating instructions!

➔ Connect supply pressure to connection "1" (3 .. 7 bar; instrument air, free from oil, water and dust)

➔ Attach the exhaust line or silencer to connection "3"!

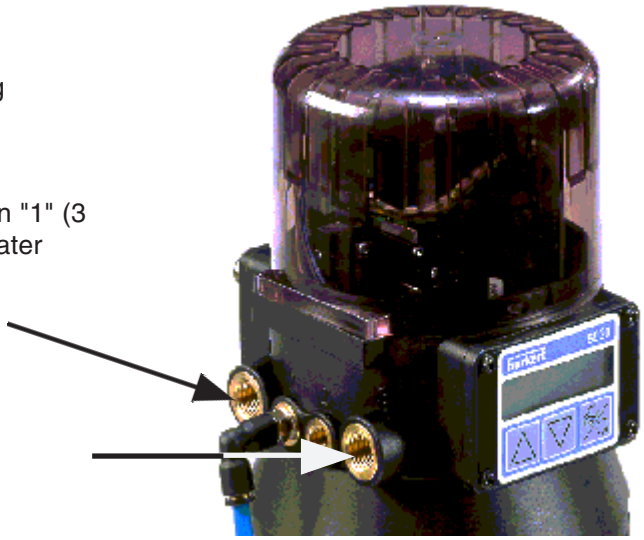

NOTE Remove the protective caps from the valve and and the TOP Control Continuous!

MAN 1000010084 EN Version: K Status: RL (released | freigegeben) printed: 23.04.2009

* Electrical installation - multipole connector

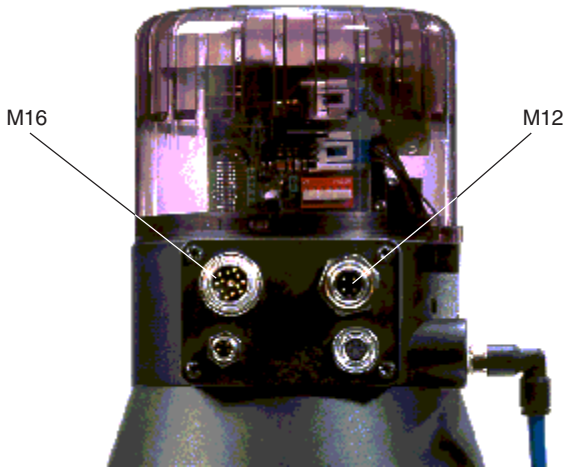

➔ Apply the setpoint signal to the circular connector M16

Configuration of the circular connector M 16

Pin	Allocation	External connection/Signal level
B	Setpoint + (0/4 ... 20 mA or 0 ... 5/10 V)	B ——— + (0/4 ... 20 mA or 0 ... 5 / 10 V)
A	Setpoint GND	A ——— GND

➔ Apply the supply voltage to the circular connector M12

Configuration of the circular connector M 12

Pin	Allocation	External connection
1	+ 24 V	1 ——— 24 V DC ± 10 %
2	not connected	max. residual ripple 10 %
3	GND	3 ———
4	not connected	

NOTE Further installation notes are to be found in the chapter *Installation*.

After application of the supply voltage, the TOP Control Continuous is in operation. Carry out the necessary basic settings and initiate self-parametrization of the TOP Control.

MAN 1000010084 EN Version: K Status: RL (released | freigegeben) printed: 23.04.2009

* Electrical installation - connection terminals for cable bushings

➔ Remove the cover with the cable bushings to gain access to the terminals. This is done by unscrewing the 4 self-tapping screws.

➔ Apply the setpoint signal and the supply voltage to the respective terminals (see *Terminal configuration with cable bushings*).

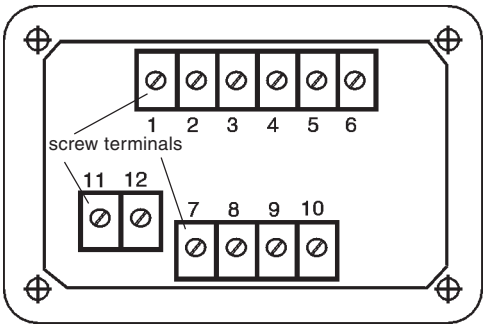

Terminal configuration with cable bushings

Terminal	Allocation	External connection
1	Setpoint +	1 ——— + + (0/4 ... 20 mA or 0 ... 5/10 V)
2	Setpoint GND	2 ——— GND
5	Operating voltage +	5 ——— 24 V DC ± 10 %
6	Operating voltage GND	6 ——— max. residual ripple 10 %

NOTE Further installation notes are to be found in the chapter *Installation*.

After application of the supply voltage, the TOP Control Continuous is in operation. Carry out the necessary basic settings and initiate self-parametrization of the TOP Control.

MAN 1000010084 EN Version: K Status: RL (released | freigegeben) printed: 23.04.2009

Basic settings of the TOP Control Continuous

Configuration of the keys

MANUAL/AUTOMATIC-key — Switch between main and subitems, e.g. *ACT FUNC - FUNCSNGL*

Arrow keys — Switch between equal-ranking menu items, e.g. *ACTFUNC - INPUT*

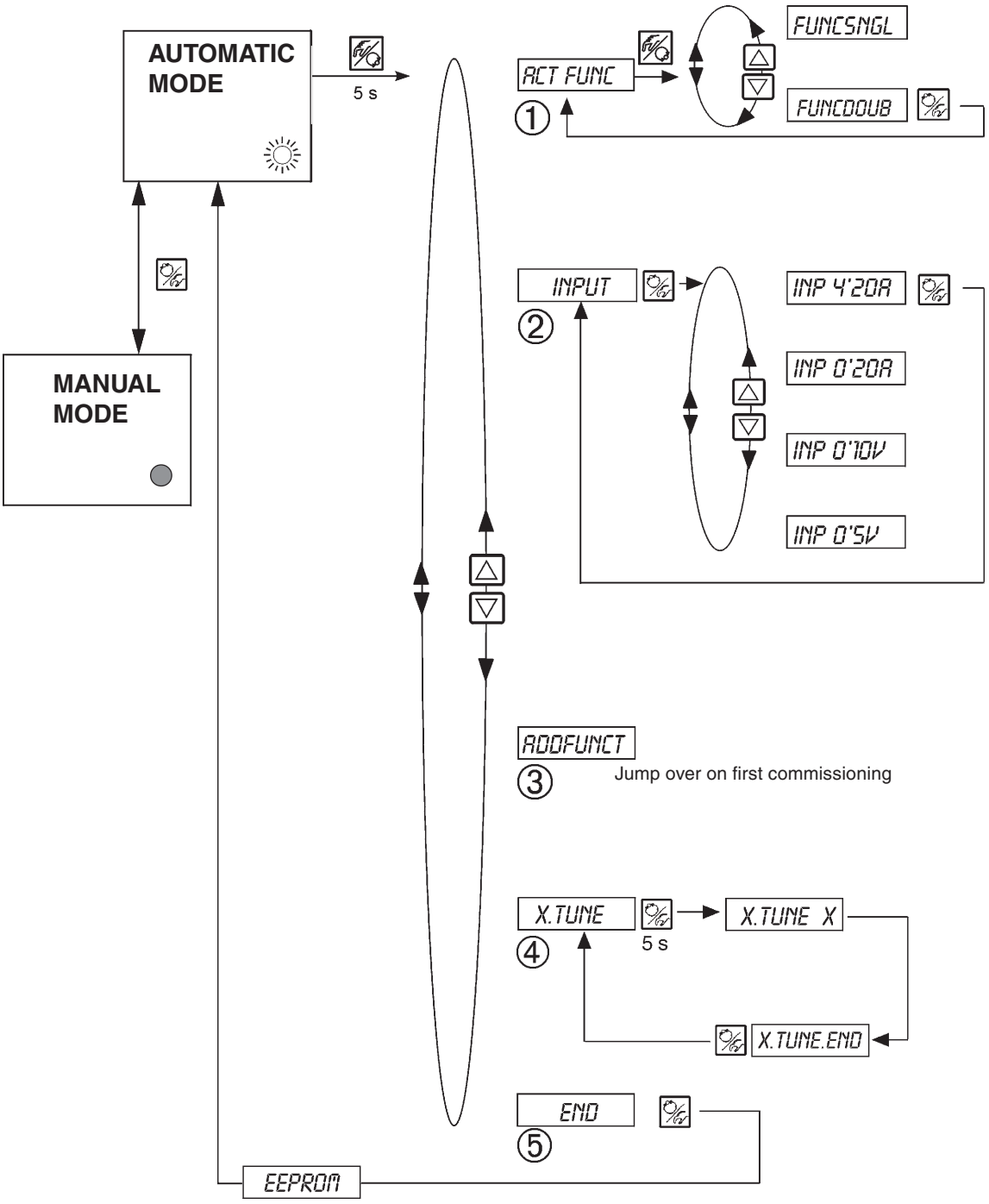

MAN 1000010084 EN Version: K Status: RL (released | freigegeben) printed: 23.04.2009

Settings in the menu items

① *ACTFUNC* **Actuator function**

FUNC SNGL - single-acting
FUNC DOUB - double-acting

② *INPUT* **Standard signal**

INP 4'20A - Current 4 ... 20 mA
INP 0'20A - Current 0 ... 20 mA
INP 0'10V - Voltage 0 ... 10 V
INP 0'5V - Voltage 0 ... 5 V

③ *ADDFUNCT* **Jump over**

④ *X.TUNE* **Initiate self-parametrization**

⑤ *END XX* **Return to AUTOMATIC mode**;
the display *EEPROM* appears until the settings have been in the memory.

Entering the position setpoint in the AUTOMATIC mode

After selection of the basic settings and return to the AUTOMATIC mode, the TOP Control Continuous works as a positioner.

→ Enter the position setpoint via the signal.

Switching between the display options:

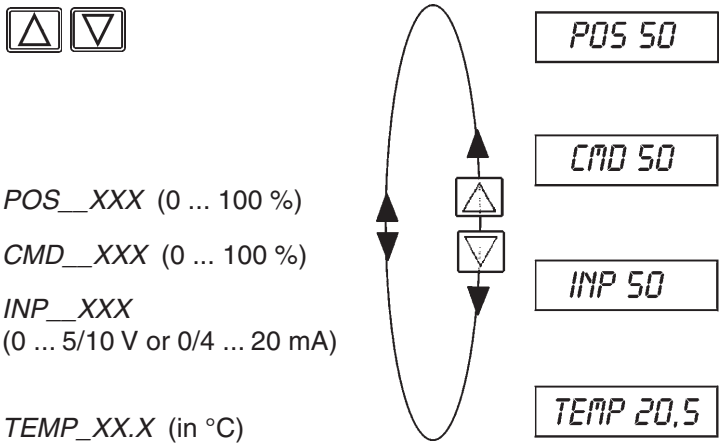

Display:

- Actual position of valve actuator — *POS__XXX* (0 ... 100 %)
- Setpoint position of valve actuator — *CMD__XXX* (0 ... 100 %)
- Input signal for setpoint position (here identical to setpoint position) — *INP__XXX* (0 ... 5/10 V or 0/4 ... 20 mA)
- Temperature inside TOP Control Continuous housing — *TEMP_XX.X* (in °C)

MAN 1000010084 EN Version: K Status: RL (released | freigegeben) printed: 23.04.2009

Manual opening and closing of the valve actuator in the MANUAL mode

Open valve actuator: △

Close valve actuator: ▽

Display: the display set in the AUTOMATIK mode is retained.

NOTE Select the display *POS_XXX* , in this case the actual position of the valve actuator can be checked.

MAN 1000010084 EN Version: K Status: RL (released | freigegeben) printed: 23.04.2009

INSTALLATION

MAN 1000010084 EN Version: K Status: RL (released | freigegeben) printed: 23.04.2009

** Alternative chapters or functions depending on device configuration*

NOTE See data sheet for dimensions of TOP Control and the variants of the complete device, consisting of TOP Control Continuous, pneumatic actuator and valve.

Installation of the valve

NOTE The actuator must not be connected.
For dimensions and threads, see data sheet for the process valve.

Turning the TOP Control Continuous

If, after installation of the continuous valve, the display of the TOP Control Continuous is poorly visible or it is difficult to attach the cable or hoses, the TOP Control Continuous may be rotated relative to the pneumatic actuator.

Procedure

➔ Disconnect the fluidic connection between TOP Control Continuous and pneumatic actuator.

➔ Loosen the fixing screws recessed into the side of the housing (hex socket SW3, see chapter *System description - Construction of the TOP Control Continuous*).

➔ Rotate the TOP Control Continuous *clockwise without lifting* into the desired position.

➔Retighten the fixing screw with 1.2 Nm moderate torque.

➔ Remarke the fluidic connection between TOP Control Continuous and pneumatic actuator, using longer hoses if necessary.

ATTENTION! If theTOP Control Continuous is lifted during rotation (axially displaced), the mechanical coupling to the position sensor mechanism may be damaged. By turning in the wrong direction (anticlockwise), there is a risk of unhooking the position sensor mechanism. This can be reconnected only with a special tool!

ATTENTION! To assure leak tightness of the device (IP65), the screw for connecting TOP Control Continuous and process valve shall be tightened with a torque not exceeding 1.2 Nm!

MAN 1000010084 EN Version: K Status: RL (released | freigegeben) printed: 23.04.2009

Fluidic connection of the TOP Control Continuous

➔ Apply the supply pressure to connection“1" (3..7 bar, instrument air, free from oil, water and dust)

➔ Attach the exhaust line or silencer to connection „3“

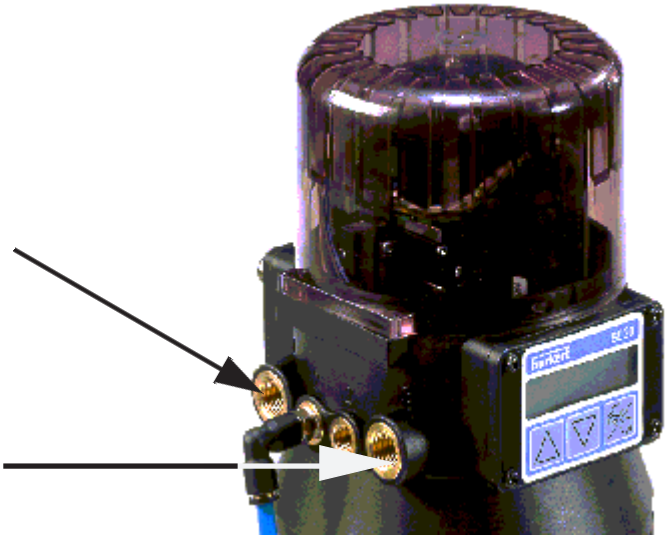

NOTE

Maintain the applied supply pressure, without fail**, at least** 0.5 - 1 bar over that required to bring the pneumatic actuator into the end position. This assures that the control behaviour in the upper region of the stroke will not be significantly affected negatively if the pressure difference is too small.

Keep variations in the supply pressure as low as possible during operation (max. ± 10 %). With larger variations, the controller parameters calibrated with the AUTOTUNE function will not be optimal.

Remove the protective caps from the valve and the TOP Control Continuous.

MAN 1000010084 EN Version: K Status: RL (released | freigegeben) printed: 23.04.2009

* Electrical connection - multipole connectors

ATTENTION!

For connection to the technical earth (ground) (TE), a threaded stud with nut is provided on the connection module. To assure electromagnetic compatibility (EMC), connect this stud to a suitable earthing (grounding) point using as short a cable as possible (max. 30 cm).

NOTE

Use of the 4 - 20 mA setpoint input

If the voltage supply of a TOP Control device fails in a row of such devices connected in series, the input of the failed device will become high-impedance. This will cause the 4 - 20 mA standard signal to fail. If this occurs, please contact Bürkert Service directly.
With Profibus DP or DeviceNet:
The markings of the multipole plugs and sockets, and the contacts are to be found in the respective chapters.

Marking of the multipole plugs or sockets and the contacts

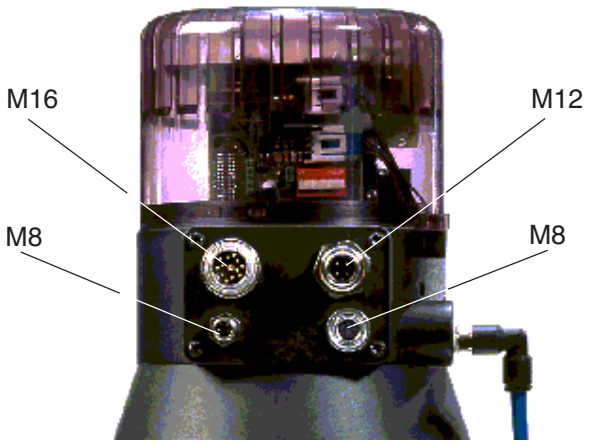

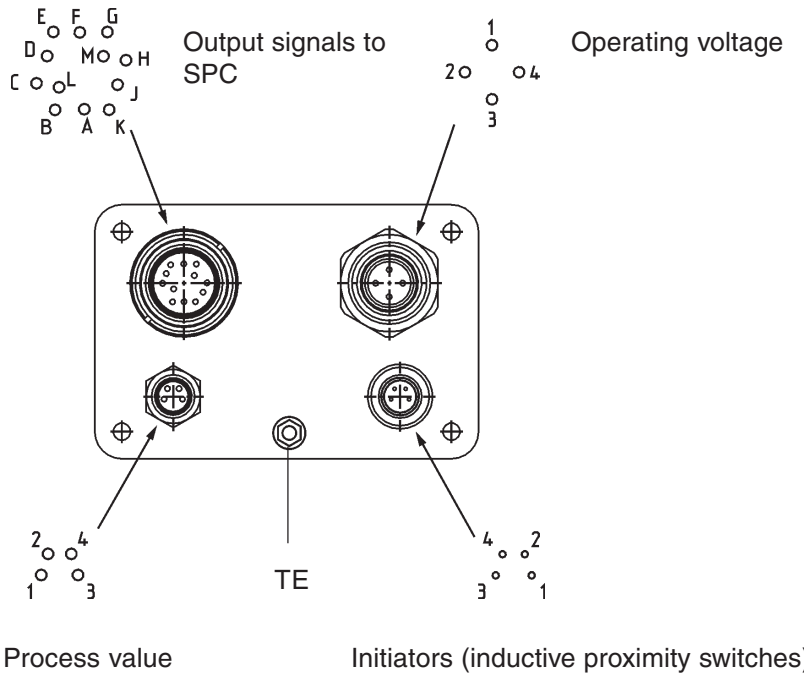

MAN 1000010084 EN Version: K Status: RL (released | freigegeben) printed: 23.04.2009

Output signals for SPS (circular plug M16)

Pin	Allocation	External connection/signal level
A B	Setpoint GND Setpoint + (0/4..20 mA or 0..5/10 V)	B ——— + (0/4 ... 20 mA or 0..5/10 V) completely isolated electrically A ——— GND
C D	Analog position feedback + Analog position feedback GND	C ——→ + (0/4 ... 20 mA or 0 ... 5/10 V) completely isolated electrically D ——→ GND
E F G	Binary output 1 Binary output 2 Binary output GND	E ——→ 24 V / 0 V F ——→ 24 V / 0 V G ——→ GND
H J	Binary input + Binary input GND	H ——— + ——— 0 ... 5 V (log. 0) 10 ... 30 V (log. 1) J ——— GND
K L M	not connected not connected not connected	

Operating voltage (circular plug M 12)

Pin	Allocation	External connection
1 2 3 4	+ 24 V not connected GND not connected	1 ——— 24 V DC ± 10 % max. residual ripple 10 % 3 ———

Inductive proximity switches (circular socket M 8)

Pin	Allocation	Signal level
1 2	Proximity switch 1 + (NO) Proximity switch 1 GND	+24 V DC ——— S1 ——— 1 ——→ open / 24 V GND ——— 2 ——→ GND
3 4	Proximity switch 2 + (NO) Proximity switch 2 GND	+24 V DC ——— S2 ——— 3 ——→ open / 24 V GND ——— 4 ——→ GND

MAN 1000010084 EN Version: K Status: RL (released | freigegeben) printed: 23.04.2009

Process value (circular plug M 8)

Input type *	Pin	Allocation	Jumper**	External connection
4 ... 20 mA - internal supply	1 2 3 4	+ 24 V supply transmitter Output Transmitter GND bridge to GND (GND from 3-conductor transmitter)		1 I 2 Transmitter 3 GND 4
4 ... 20 mA - external supply	1 2 3 4	not connected Process actual + not connected Process actual -		2 4 ... 20 mA 4 GND
Frequency - internal supply	1 2 3 4	+ 24 V - supply sensor Clock input + Clock input - (GND) not connected		1 +24 V 2 Clock + 3 Clock -
Frequency - external supply	1 2 3 4	not connected Clock input + Clock input - not connected		2 Clock + 3 Clock -
Pt-100 (see Note below)	1 2 3 4	not connected process actual 1(current supply) process actual 3 (GND) process actual 2 (compensation)		2 3 4 Pt 100

* May be set via software (section *Procedure for specifying the basic settings*)

** The jumper is situated on the connection board of the TOP Control Continuous (see next page)

NOTE For line compensation reasons, connect sensor Pt-100 via 3 conductors. PIN 3 and PIN 4 must be bridged at the sensor.

Process value with the option flow rate controller (2 circular plugs M8)
Option: with temperature sensor input (3 circular plugs M8)

Input type	No. of plugs	Pin	Configuration	Jumper	ext. connection
internally supplied transmitter*	1	1 2 3 + 4	+ 24 V - supply to transmitter p1 4 ... 20 mA - output from transmitter p1 n.c.		1.1 + 24 V 1.2 p1
	2	1 2 3 + 4	+ 24 V - supply to transmitter p2 4 ... 20 mA - output from transmitter p2 n.c.		2.1 + 24 V 2.2 p2
Option: temperature transmitter	3	1 2 3 + 4	+ 24 V - supply to transmitter 4 ... 20 mA - output from temperature transmitter n.c.		3.1 + 24 V 3.2 Temp

* With external supply of the sensors, the mass of the standard signal must be connected to the mass of the supply voltage.

Circular plug M12
1.2 p1
2.2 p2
1 GND
3

MAN 1000010084 EN Version: K Status: RL (released | freigegeben) printed: 23.04.2009

* Electrical connection - terminals for cable bushing

ATTENTION!

For connection to the technical earth (ground) (TE), a threaded stud with nut is provided on the connection module. To assure electromagnetic compatibility (EMC), connect this stud to a suitable earthing (grounding) point using as short a cable as possible (max. 30 cm).

NOTE

Use of the 4 - 20 mA setpoint input

If the voltage supply of a TOP Control Continuous device fails in a row of such devices connected in series, the input of the failed device will become high-impedance. This will cause the 4 - 20 mA standard signal to fail. If this occurs, please contact Bürkert Service directly.

Connection PCB of the TOP Control Continuous with screw terminals and jumpers

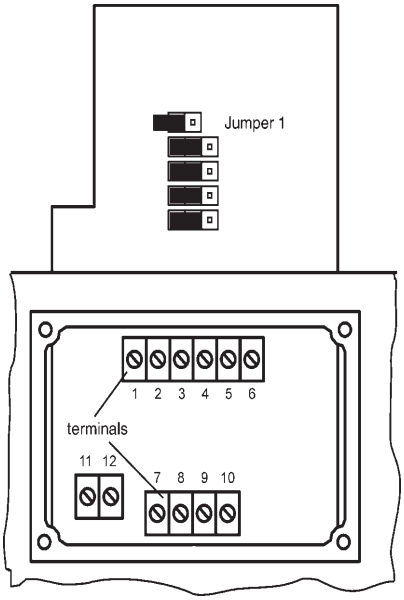

➔ Remove the cover with the cable bushings to gain access to the screw terminals. This is done by unscrewing the 4 self-tapping screws.

Terminal configuration with cable bushings

Terminal	Allocation	External connection
1 2	Setpoint + Setpoint GND	1 ——— + + (0/4 ... 20 mA or 0 ... 5/10 V 2 ——— GND
3 4	Analog position feedback + Analog position feedback GND	3 ——→ + (0/4 ... 20 mA or 0 ... 5/10 V) completely isolated electrically 4 ——→ GND
5 6	Operating voltage + Operating voltage GND	5 ——— 6 ——— 24 V DC ± 10 % max. residual ripple 10 %

MAN 1000010084 EN Version: K Status: RL (released | freigegeben) printed: 23.04.2009

Choice of binary outputs or process value input

➔ Select using the jumpers:

2 binary outputs (see terminal *Allocation when binary outputs selected*) or

Process value input (see terminal *Allocation when process value input selected*).

Terminals 7 to 10 are connected to the corresponding signals.

Jumper	Terminal	Allocation	External connection
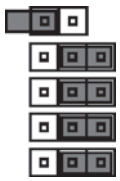	7 8	Binary output 1 Binary output 1	7 — 24 V / 0 V NC / NO 8 — GND
	9 10	Binary output 2 Binary output 2	9 — 24 V / 0 V NC / NO 10 — GND

Terminal allocation on selection of process value input:

➔ The input type is set via the configuration menu (see *Procedure for specifying the basic settings*).

Input type*	Jumper	Terminal	Allocation	External connection
4 ... 20 mA internal supply		7 8 9 10	+ 24 V input transmitter Output transmitter Bridge to GND (GND from 3-conductor transmitter) GND	7 I → 8 Transmitter 9 GND 10
Frequency internal supply		7 8 9 10	+ 24 V supply sensor Clock input + not connected Clock input - (GND)	7 — +24 V 8 — Clock + 10 — Clock - (GND)
4 ... 20 mA external supply		7 8 9 10	not connected Process actual + Process actual - not connected	8 — + (4 ... 20 mA) 9 — GND
Frequency external supply		7 8 9 10	not connected Clock input + not connected Clock input -	8 — Clock + 10 — Clock -
Pt-100 (see Note below)		7 8 9 10	not connected Process actual 1 (current supply) Process actual 2 (compensation) Process actual 3 (GND)	8 9 10 Pt100

NOTE For reasons of line compensation, connect the Pt 100 sensor over 3 conductors. Be sure to bridge terminals 9 and 10 at the sensor.

MAN 1000010084 EN Version: K Status: RL (released | freigegeben) printed: 23.04.2009

Terminal allocation with binary outputs

Terminal	Allocation	External connection
11 12	Binary input + Binary input GND	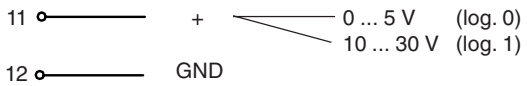

MAN 1000010084 EN Version: K Status: RL (released | freigegeben) printed: 23.04.2009

* Setting the inductive proximity switches (Option)

ATTENTION!

In order to set the inductive proximity switches, the housing of the TOP Control Continuous must opened. Switch off the operating voltage before making this intervention!

Opening the housing of the TOP Control Continuous

➔ Remove any lead seals or fastenings present between cover and housing.

➔ Turn the cover anticlockwise and lift it off.

Positioning the inductive proximity switches

➔ The inductive proximity switches are positioned vertically with one adjusting screw each:

Turning clockwise
causes upward adjustment

Turning anticlockwise
causes downward adjustment

ATTENTION!

On adjusting the height of the inductive proximity switches, make sure that adjacent flexes are not pulled (e.g. by getting hooked in the proximity switches). If this is not adhered to, plugged connections may be damaged or loosened).

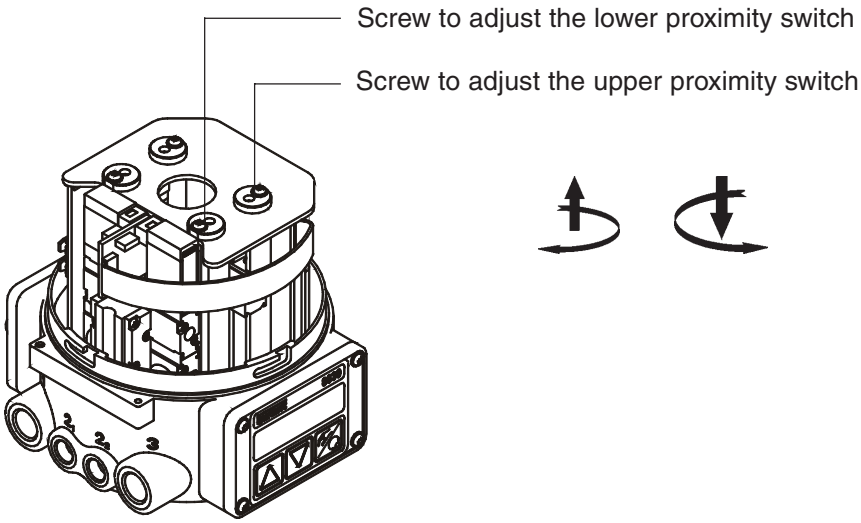

MAN 1000010084 EN Version: K Status: RL (released | freigegeben) printed: 23.04.2009

OPERATION AND CONTROLLER FUNCTION

MAN 1000010084 EN Version: K Status: RL (released | freigegeben) printed: 23.04.2009

Operating and display elements

The TOP Control Continuous is equipped with a 3-key operating and display element with LC display. The functions of the keys are described in the following sections.

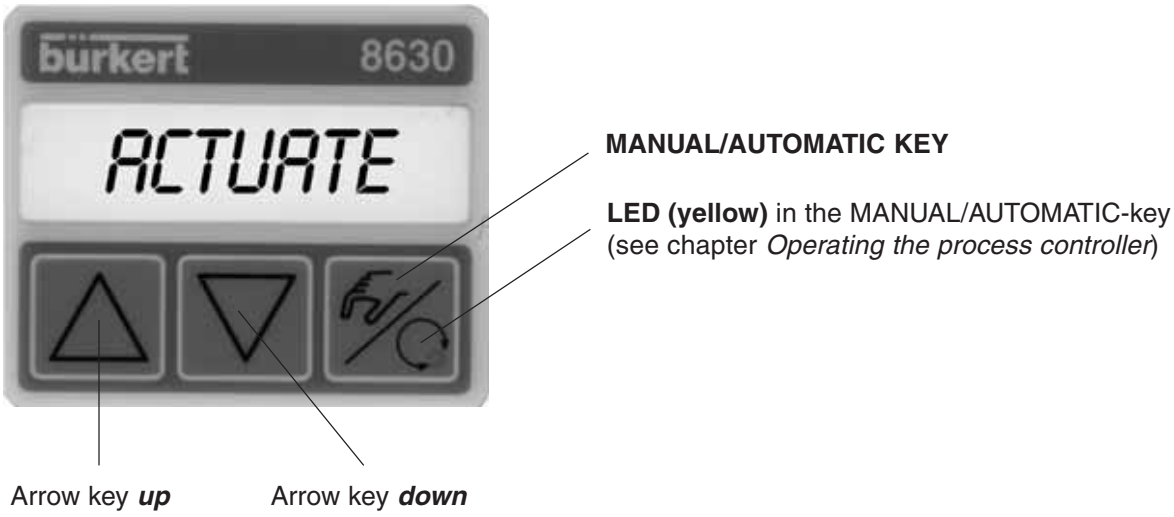

Operating levels

Operation of the TOP Control Continuous is done via two operating levels:

- ***Process operating level:***

  After the device is switched on, the process operating level is active. In this level, you can switch between the operating modes AUTOMATIC and MANUAL. In the AUTOMATIC mode, position or process control (only for the process controller option) runs. In the MANUAL mode, the valve can be manually opened and closed.

- ***Configuration level:***

  In the configuration level, you can specify on first commissioning the basic functions and configure supplementary functions if needed.

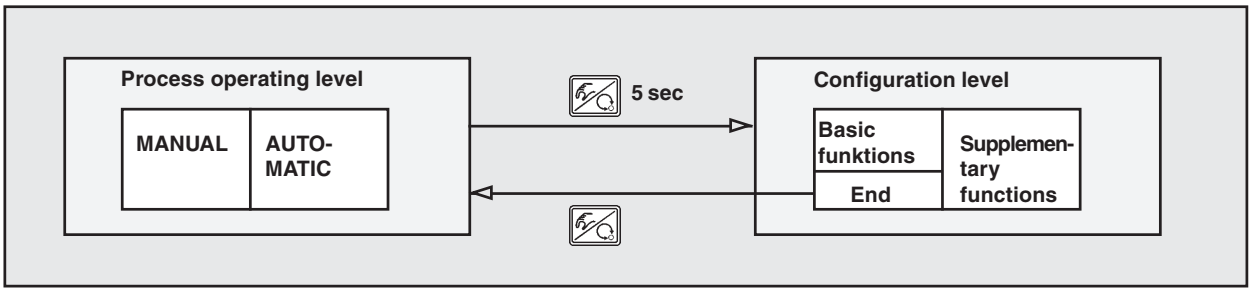

MAN 1000010084 EN Version: K Status: RL (released | freigegeben) printed: 23.04.2009

Commissioning and set-up as a positioner

➔ Before commissioning, execute the fluidic and electrical installations.

Procedure for specifying the basic settings

➔ On first commissioning of the TOP Control Continuous, carry out the following basic settings:

- Specify the function of the pneumatic actuator used.
- Specify the standard signal input for setpoint setting (4..20 mA, 0..20 mA, 0..10 V or 0..5 V).
- Start the automatic adaptation of the positioner to the current operating conditions (AUTOTUNE).

Configuration of the keys

	MANUAL/AUTOMATIC-key	Switch between main and sub-menu items, e.g. *ACT FUNC - FUNCSNGL*
	Arrow keys	Switch between eual-ranking menu items, e.g. *ACTFUNC - INPUT*

Factory setting of the positioner

Function	Factory setting	Function	Factory setting
ACTFUNC	*FUNCSNGL*	*OUTPUT*	
INPUT	*INP 4'20A*	*OUT ANL:*	
CHARACT	*CHA LIN*	*OUT POS*	*OUT 4'20 A*
DIR.CMD	*DIR.CRISE*	*OUT BIN:*	
CUTOFF	$CUT_{\perp}$ = 0 %; $CUT^{\top}$ = 100 %	*OUT DEV*	*DEV 5.0 NO*
DIR.ACT	*DIR.ARISE*	*BIN-IN*	
SPLTRNG	$SR_{\perp}$ = 0 (%); $SR^{\top}$ = 100 (%)	*B.IN SPOS*	*SPOS 000 NO*
X.LIMIT	$LIM_{\perp}$ = 0%, $LIM^{\top}$ = 100%	*X.CONTROL*	
X.TIME		*X.CO DBND*	1 %
T.OPN	Values determined by *AUTOTUNE*	*X.CO PARA*	
T.CLS	Values determined by *AUTOTUNE*	$KX^{\top}$	Values determined by *AUTOTUNE*
After execution of *SETFACT:* 1 s		$KX_{\perp}$	Values determined by *AUTOTUNE*
		After execution of *SETFACT:* 1	
		CODE	*CODE 0000*

MAN 1000010084 EN Version: K Status: RL (released | freigegeben) printed: 23.04.2009

Main menu for the settings on commissioning

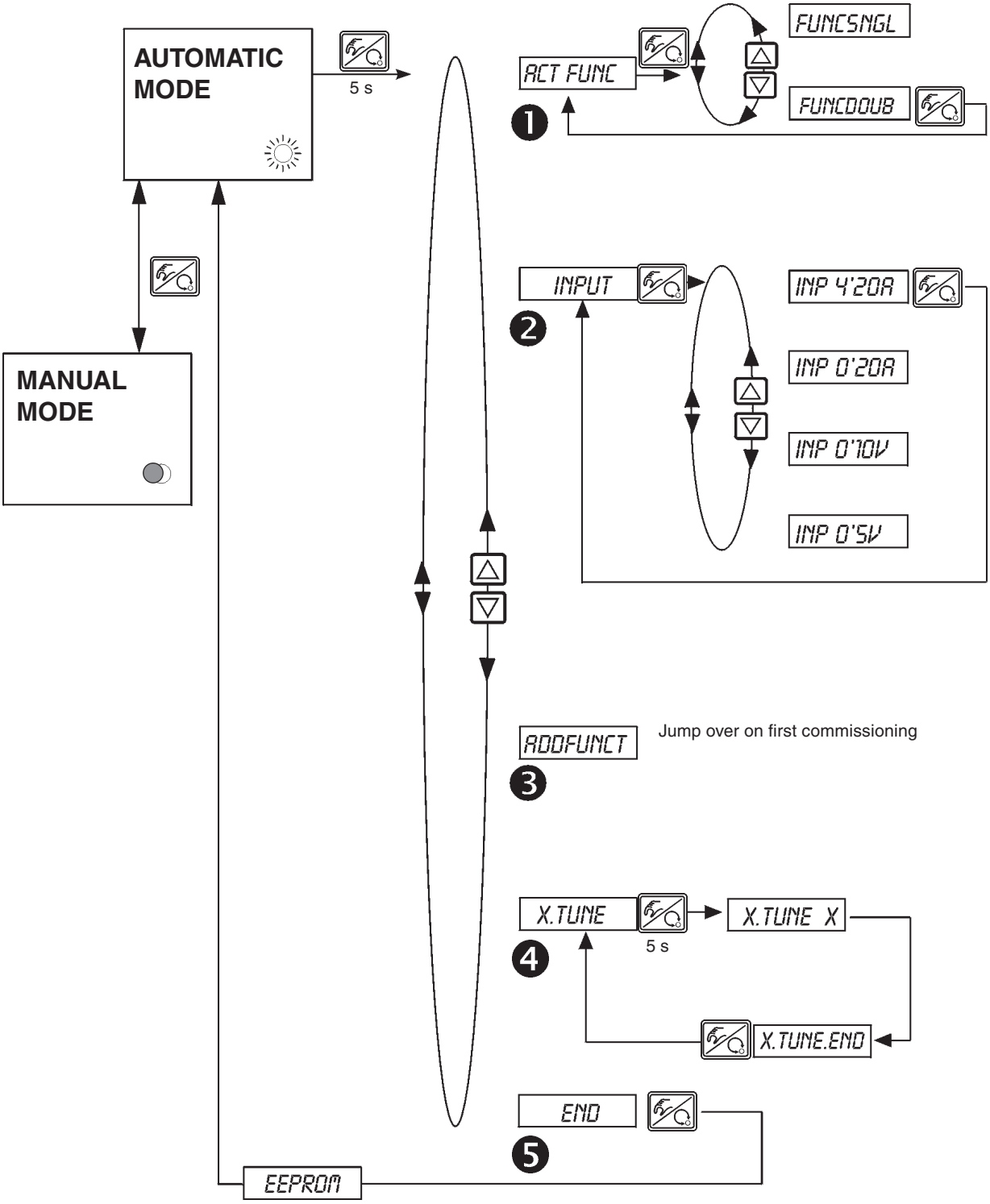

MAN 1000010084 EN Version: K Status: RL (released | freigegeben) printed: 23.04.2009

Description of the procedure

After the voltage supply has been switched on, the positioner is in the process operating level in the AUTOMATIC mode. To specify the basic settings, switch to the configuration level. Depress the MANUAL/AUTOMATIC key for 5 seconds. The display then shows ACTFUNCT, the first item of the main menu.

To make a setting under the menu item *ACTFUNC*, press the MANUAL/AUTOMATIC key briefly.

Then one of the sub-menu items appears on the display. The arrow keys are used to switch between these sub-items, enabling the desired settings to be made. The desired setting is confirmed after selection by pressing the MANUAL/AUTOMATIC key. The arrow keys are also used to switch between the items of the main menu (*ACTFUNCT, INPUT,* ...).

NOTE At the level of the sub-menu items, the selected function is shown by the three or four characters at the right of the 8-digit display. These characters flash on the display.

❶ *ACTFUNC* - Function of actuator

➔ Enter under this menu item the function of the pneumatic actuator used in combination with the TOP Control. This function is marked on the rating plate of the actuator.

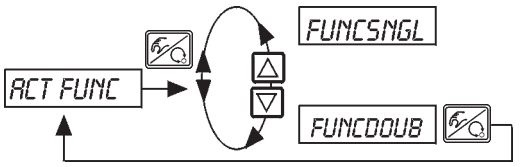

- single-acting
- double-acting

❷ INPUT - Selected standard signal

➔ Enter under this menu item the standard signal used for the setpoint.

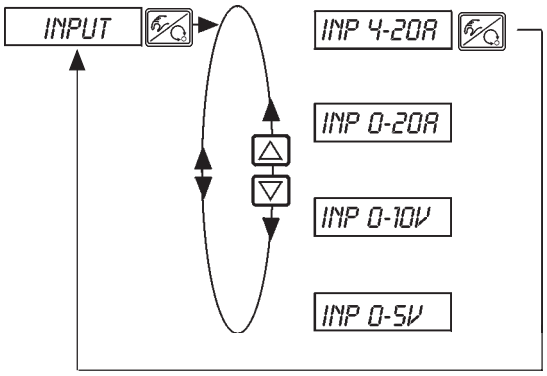

- Current 4 ... 20 mA
- Current 0 ... 20 mA
- Voltage 0 ... 10 V
- Voltage 0 ... 5 V

MAN 1000010084 EN Version: K Status: RL (released | freigegeben) printed: 23.04.2009

❸ *ADDFUNCT*

See section *Configuring the supplementary functions.*

➔ Jump over this menu item on first commissioning.

❹ *X.TUNE* - Autotune for positioner

➔ Start the program for automatic parametrization of the TOP Control Continuous via the menu item X.TUNE.

The following functions are initiated automatically:

- Adaptation of the sensor signal to the (physical) stroke of the valve used
- Determination of parameters of the PWM signals for driving the solenoid valves integrated in the TOP Control Continuous.
- Setting of the controller parameters of the positioner. Optimization is done according to the criteria: as short a correcting time as possible and simultaneously freedom from overshoot.

➔ Start AUTOTUNE by calling up X.TUNE in the main menu.

➔ Then depress the MANUAL/AUTOMATIC key for 5 seconds.

NOTE To cancel *AUTOTUNE*, operate both arrow keys at the same time and select *X.TUN BRK* .

Start the automatic adaptation of the positioner to the current operating conditions

Display	Description
TUNE 5 *TUNE 4* : *TUNE 0*	Countdown from 5 to 0 start of *AUTOTUNE*
¦ *X.T INIT* ¦ *X.T A1-P* ¦ *X.T TOPN* ¦ *X.T TCLS* :	Display of the autotune phase in progress at the moment (continuation is indicated by a rotating bar to the left of the display)
TUNE-END	Flashing display → end of *AUTOTUNE*
X.ERR X	Message on occurrence of an error (Indication right: Error number, see chapter *Maintenance and controller fault rectification)*

NOTE The basic settings onthe TOP Control Continuous are made in the factory. On commissioning, nevertheless, execution of ***X.TUNE*** is **absolutely necessary**. TOP Control Continuous then determines automatically the optimum settings for the current operating conditions.
If the supplementary function *X.CONTRL* is present in the main menu during execution of *X.TUNE*, the positioner dead band *X.CO DBND* is additionally determined automatically as a function of the frictional behaviour of the positioning mechanism (see chapter *Supplementary Functions - X.CONTROL*).

MAN 1000010084 EN Version: K Status: RL (released | freigegeben) printed: 23.04.2009

ATTENTION!

During execution of the *AUTOTUNE* function, the valve moves on its own away from its current position. For this reason, never execute *AUTOTUNE* while the process is running!

MANUAL *TUNE* - FUNCTIONS

Access to the manual *TUNE* functions is obtained by selection *X.TUNE* in the main menu and briefly pressing the MANUAL/AUTOMATIC key, or on abortion of countdown, by releasing the MANUAL/ AUTOMATIC key.

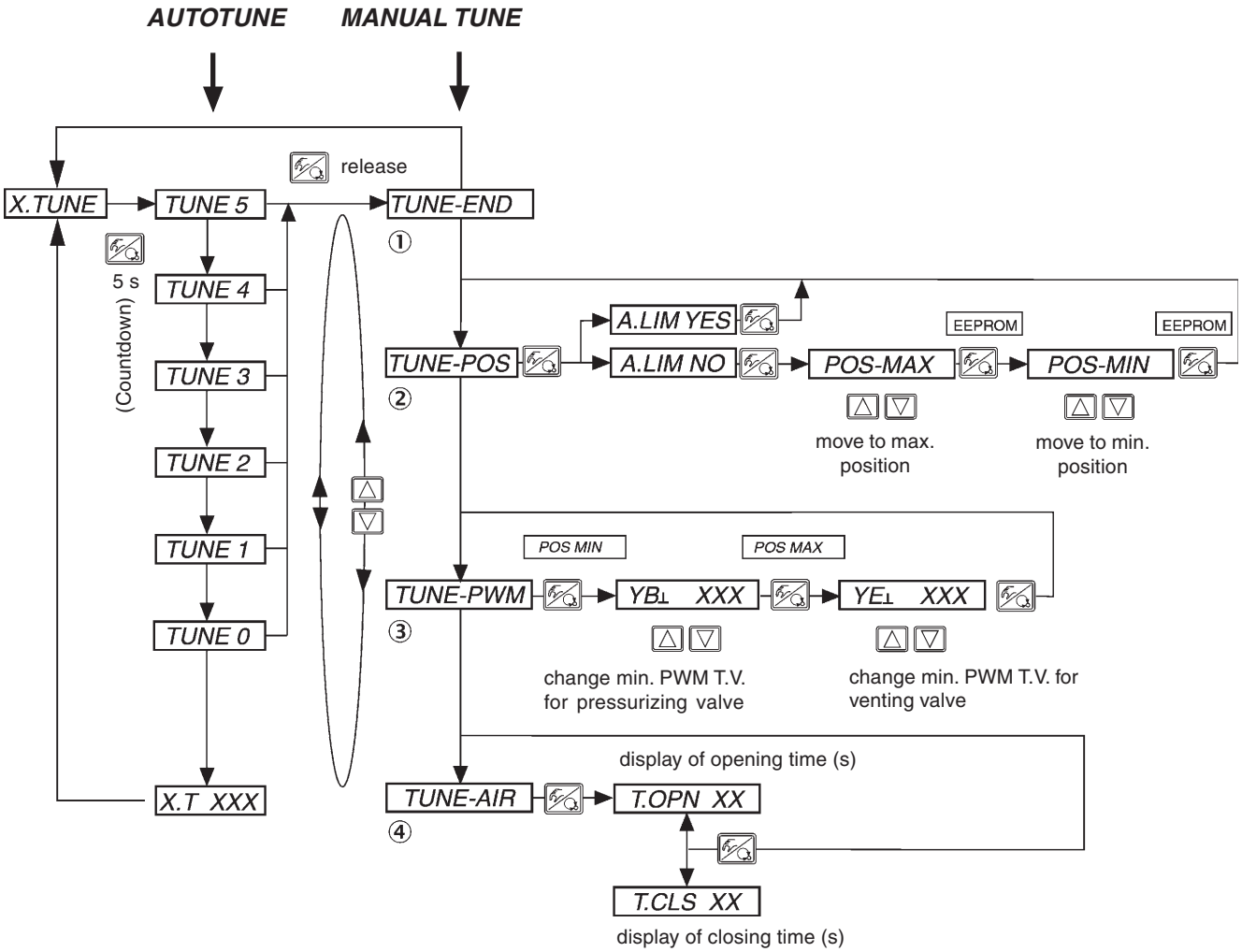

The following parameters, which are automatically determined during *X.TUNE,* may be manually present or adjusted afterwards.

① *TUNE-END* - Return to main menu

② *TUNE-POS* - Present end position

The *AUTOTUNE* function determines the end positions of the control armature from the physically stops. Certain armatures (e.g. rotating vanes) have no physically stops, so that the end positions must be manually present using *TUNE-POS*. When executed immediately afterwards, *AUTOTUNE* assumes the manual end settings and continues with the setting of the positioning system and optimization of the positioner.

NOTE If manual presetting of the end positions by means of *TUNE-POS* is necessary, it must be done **before** execution of *AUTOTUNE*.

MAN 1000010084 EN Version: K Status: RL (released | freigegeben) printed: 23.04.2009

③ ***TUNE-PWM* - Readjust minimum PWM pulse-duty factor for driving the solenoid integrated in the TOP Control Continuous**

The *AUTOTUNE* function determines automatically the minimum PWM pulse-duty factor necessary for driving the solenoid integrated in the TOP Control Continuous. If the frictional characteristics of the positioning mechanism are unfavourable, these values may deviate from the optimum. By using *TUNE-PWM,* however, they can be readjusted to obtain the lowest possible speed in both directions.

NOTE The function *TUNE-PWM* must be executed **after** *AUTOTUNE*!

④ ***TUNE-AIR* - Adapt the opening to the closing time of the process valve**

With spring-closing process valves, the opening speed may be varied within certain limits by changing the supply pressure. The closing speed, however, is independent of the supply pressure and given by the spring force and the nominal diameter of the venting valve. By using *TUNE-AIR*, the opening time may be adapted to the closing time. This results in symmetrical motion, which has a favourable effect on the process control.

NOTE The function *TUNE-AIR* must be executed **after** *AUTOTUNE*!

ATTENTION!

Avoid faulty adaptation of the controller by executing ***X.TUNE* in all cases** at the supply pressure (pneumatic auxiliary energy) that will exist in later operation.

The function *X.TUNE* should preferably be executed **without** operating medium pressure to avoid disturbing influences from flow forces.

❺ *END* - Quitting the main menu and display of the software version

➔ To quit the main menu, select the item END with the arrow keys. To the right of the display the software version is shown (END XX).If the MANUAL/AUTOMATIC key is pressed, EEPROM appears on the display until the changes have been saved. After that, the device returns to the mode in which it was before switching over to the main menu (MANUAL or AUTOMATIC).

MAN 1000010084 EN Version: K Status: RL (released | freigegeben) printed: 23.04.2009

Configuring the supplementary functions

NOTE The operating concept for the TOP Control Continuous is based on a strict separation between the basic and supplementary functions. In the delivered state, only the basic functions are activated. These suffice for normal operation. For more demanding control applications, you can select and specify supplementary functions in the configuration level.

Keys in the configuration level

Press key	in Menu	in a selected and confirmed menu item
△	Scroll up (select)	Increment (increase) numeric value
▽	Scroll down (select)	Decrement (decrease) numeric value
Press key	**in Menu**	**in menu *ADDFUNCT***
	confirm selected menu item	Confirm selected menu item of supplementary menu to add it to the main menu. The menu item is marked with an asterisk (*) in the supplementary menu.
	Confirm set values	The menu item appears int he main menu and can be selected and edited there. Confirm the menu item selected and marked with asterisk in the supplementary menu for deletion from the main menu.

Configuration menu

Switching between the process operating level and the configuration level

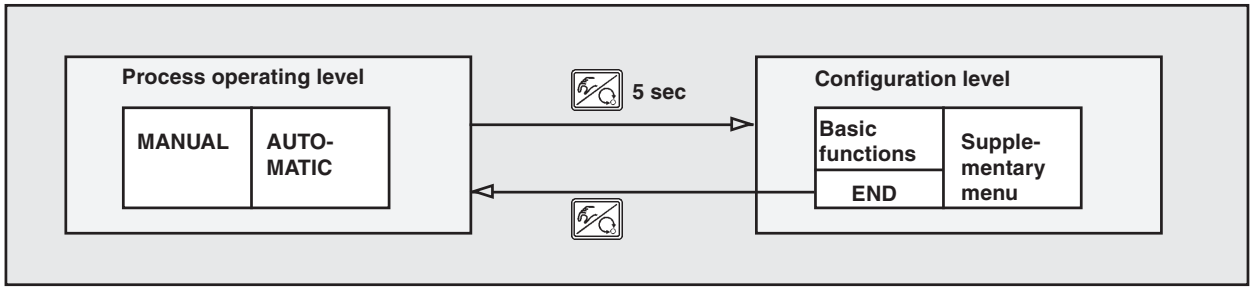

➔ **5 s** To activate the configuration menu, press (in the process operating level), the MANUAL/ AUTOMATIC key for 5 seconds.

The configuration menu consists of a main and a supplementary menu. The main menu contains initially the basic functions which are specified during first commissioning. The supplementary menu comprises supplementary functions which may be reached via the menu item ADDFUNCT of the main menu. Specification of device functions and parameters is possible only within the main menu. If needed, the main menu may be augmented by additional functions and parameters from the supplementary menu, which can then be specified.

Addition of supplementary functions to the main menu

➔ Select in the main menu the item *ADDFUNCT.*

➔ By pressing the MANUAL/AUTOMATIC key, enter the supplementary menu.

➔ With the arrow keys, select the desired supplementary function.

➔ By pressing the MANUAL/AUTOMATIC key, confirm addition of the supplementary function to the main menu. The function is automatically marked with an asterisk (*).

➔ All marked functions are added to the main menu after confirmation of *ENDFUNCT*.

➔ In the main menu, enter the parameters for the supplementary functions.

Deletion of supplementary functions from the main menu

NOTE By removing a function from the main menu, the settings previously made under this function are again invalidated.

➔ Select in the main menu the item *ADDFUNCT*.

➔ By pressing the MANUAL/AUTOMATIC key, enter the supplementary menu.

➔ With the arrow keys, select a supplementary function marked with (*).

➔ By pressing the MANUAL/AUTOMATIC key, confirm deletion of the supplementary function (the asterisk (*) marking is deleted).

➔ After confirmation of *ENDFUNCT*, the supplementary function is deactivated and deleted from the main menu.

Setting of numeric values

Numeric values are set in the menu items provided by pressing the keys „arrow up“ (increment value) or „arrow down“ (decrement value) one or more times. In the case of 4-digit numbers, only the flashing digit can be set with the arrow keys. By pressing the MANUAL/AUTOMATIC key, you can switch to the next digit.

MAN 1000010084 EN Version: K Status: RL (released | freigegeben) printed: 23.04.2009

Principle of adding supplementary functions to the main menu

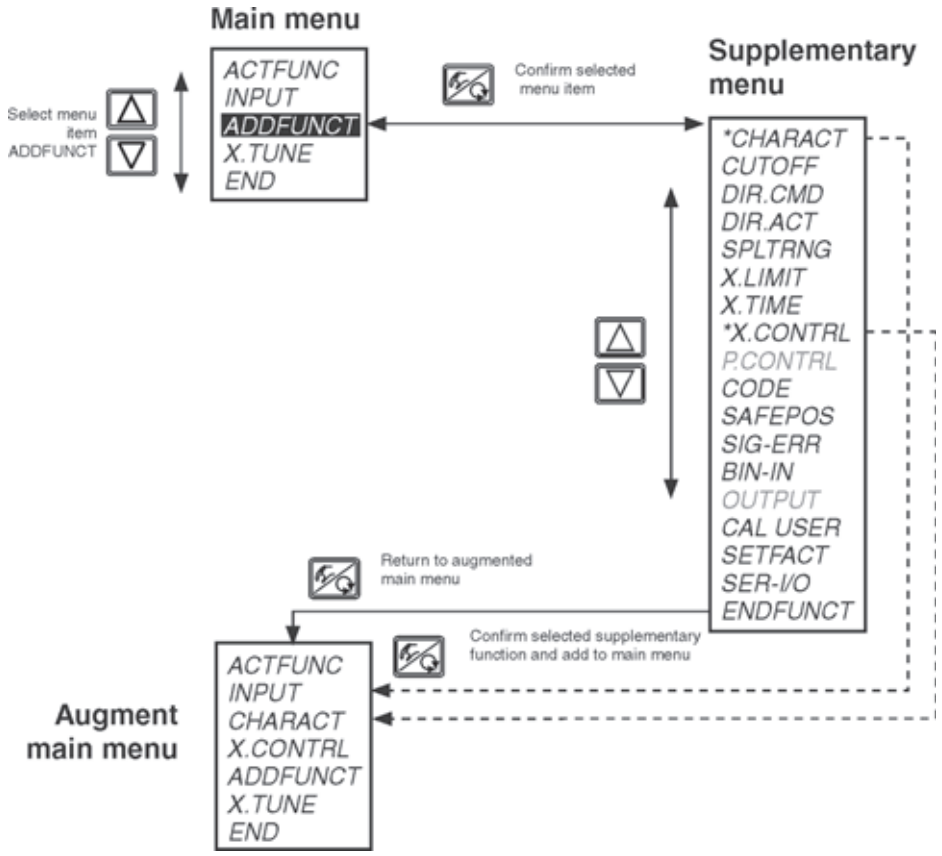

Supplementary Functions

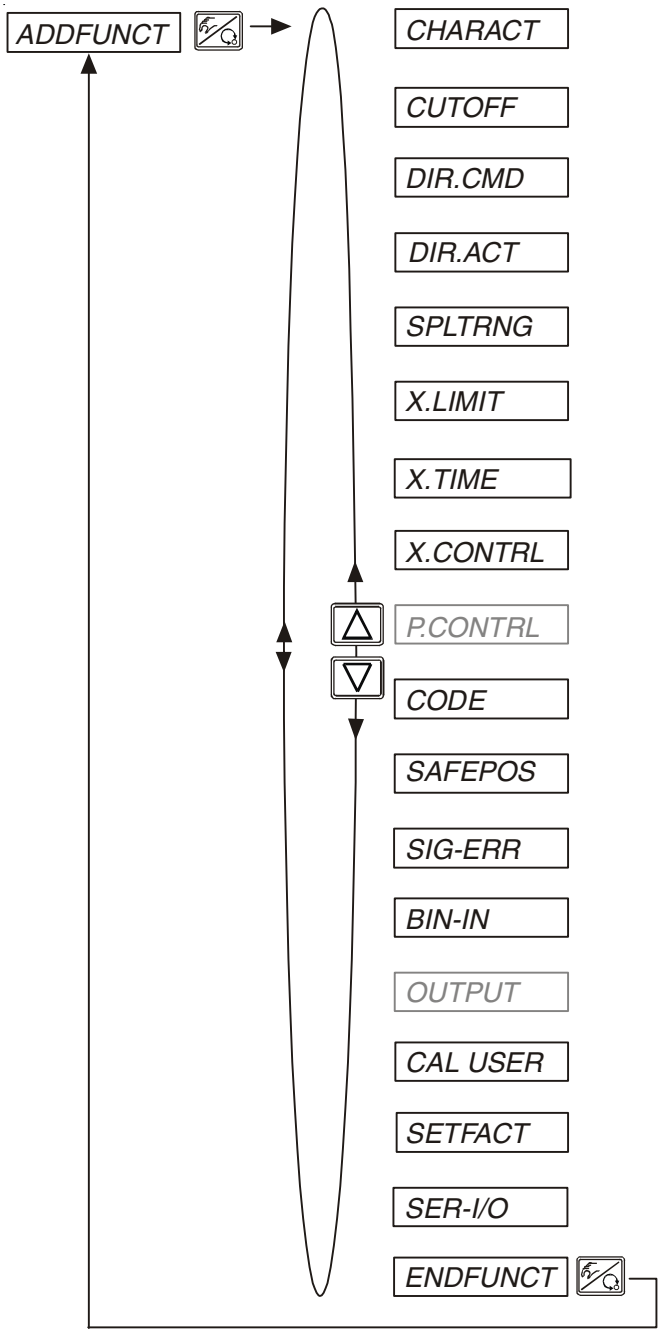

Select the transfer characteristic between input signal ans stroke (correction characteristic)

Tight closure function for positioners or process controllers (if activated)

Sense of action between input signal ans setpoint position

Allocation of state of pressurization of actuator chamber (Port 2_1) to actual position

Signal range splitting; input signal in % for which the valvetransverses the entire stroke

Limitation of mechanical stroke range

Limitation of correcting speed

Parametrization of positioner

(Parametrization of the PID process controller). Without function in the version as positioner!

Code protection for settings

Enter safety position

Configure error recognition signal level

Activation of binary input

(Configuration of the outputs, only with supplementary board for analog feedback or binary outputs)

Calibration

Reset to factory settings

Configuration of the serial interface

MAN 1000010084 EN Version: K Status: RL (released | freigegeben) printed: 23.04.2009

CHARACT

Selection of the transfer characteristic between input signal (position setpoint) and stroke (correction curve)

Customized characteristic

Factory setting: *CHA LIN*

With this function, you can select a transfer characteristic with respect to setpoint position (setpoint position CMD) and valve stroke (POS) to correct the flow or operating curve.

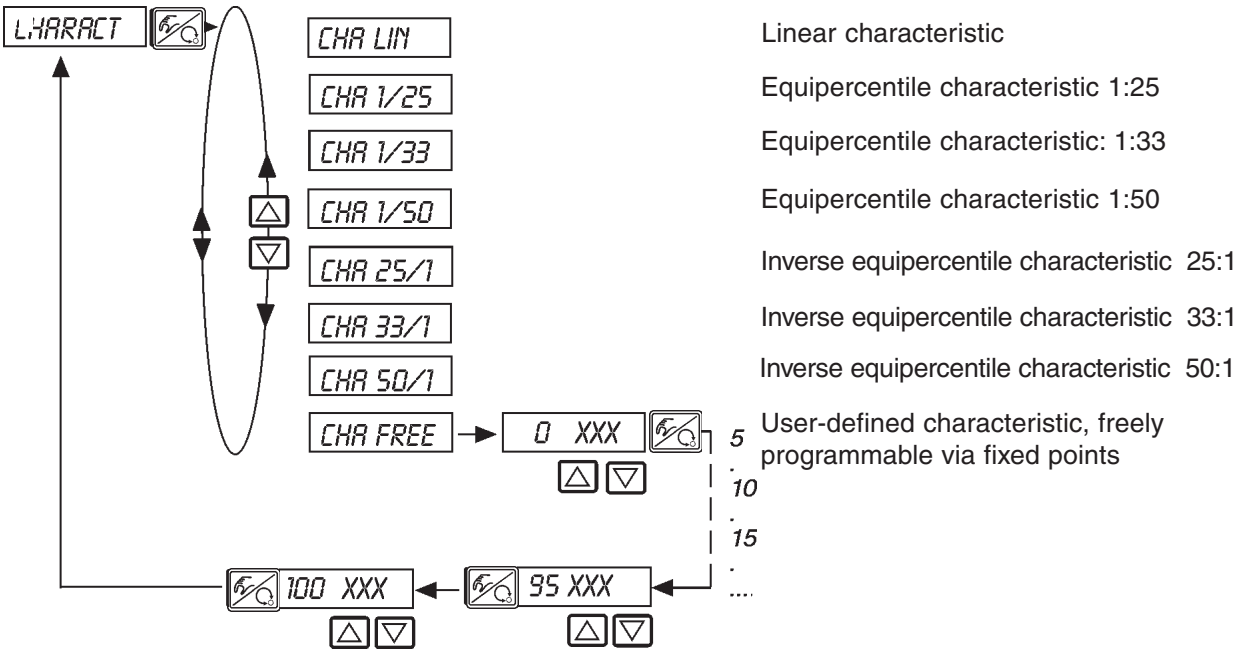

The flow characteristic $k_v = f(s)$ describes the flow through a valve, expressed by the k_v value, as a function of the stroke s of the actuator spindle. It is determined by the shape of the valve seat and the seat seal. In general, two types of flow characteristic are realized: the linear and the equipercentile.

With linear characteristics, equal changes in stroke ds are allocated to equal changes in k_v value dk_v

($dk_V = n_{lin} * ds$).

With an equipercentile characteristic, a change in stroke ds corresponds to an equipercentile change in k_v value

($dk_V/k_V = n_{gleichpr} * ds$).

The operating characteristic Q = f(s) represents the relationship between the volumetric flow Q passing through a valve installed in a system and the stroke s. This characteristic contains the properties of the piping, pumps and consumers. It hence has a different shape from the flow characteristic.

MAN 1000010084 EN Version: K Status: RL (released | freigegeben) printed: 23.04.2009

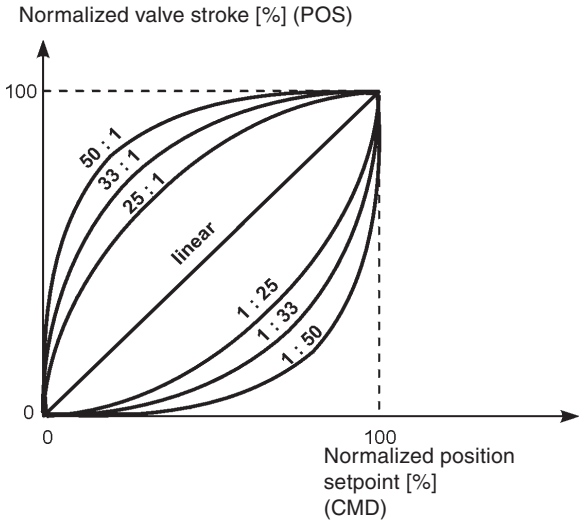

For positioning applications of control systems, special requirements are usually made on the shape of the characteristic, e.g. linearity. For this reason it is sometimes necessary to correct its shape in a suitable manner.

For this purpose, a transfer member is provided in the TOP Control Continuous which realizes different characteristics. These are used to correct the operation characteristic.

The equipercentile characteristics 1:25, 1:33, 25:1, 33:1 and 50:1 and a linear characteristic may be set. Furthermore, it is possible to freely program a characteristic via fixed points or have it calibrated automatically.

Entering the freely programmable characteristic

The characteristic is defined via 21 fixed points distributed evenly over the 0...100 % range of the position setpoint. They are separated by 5 %. Each fixed point may be allocated to a freely selectable stroke (setting range 0...100 %). The difference between two adjacent values of stroke may not exceed 20 %.

To enter the point on the characteristic (values of the function), first select the menu item ***CHR FREE.***

After pressing the MANUAL/AUTOMATIC key, the first fixed point is displayed (0 %). Next to it is the value of the function (initially 0 %).

With the arrow keys, set a value of the function between 0 and 100 %. After pressing the MANUAL/AUTOMATIC key, the next fixed point is displayed, etc. Finally, press the MANUAL/AUTOMATIC key to confirm the value of the function belonging to the last fixed point (100 %). The display returns to the menu item *CHARACT*.

MAN 1000010084 EN Version: K Status: RL (released | freigegeben) printed: 23.04.2009

Example of a programmed characteristic

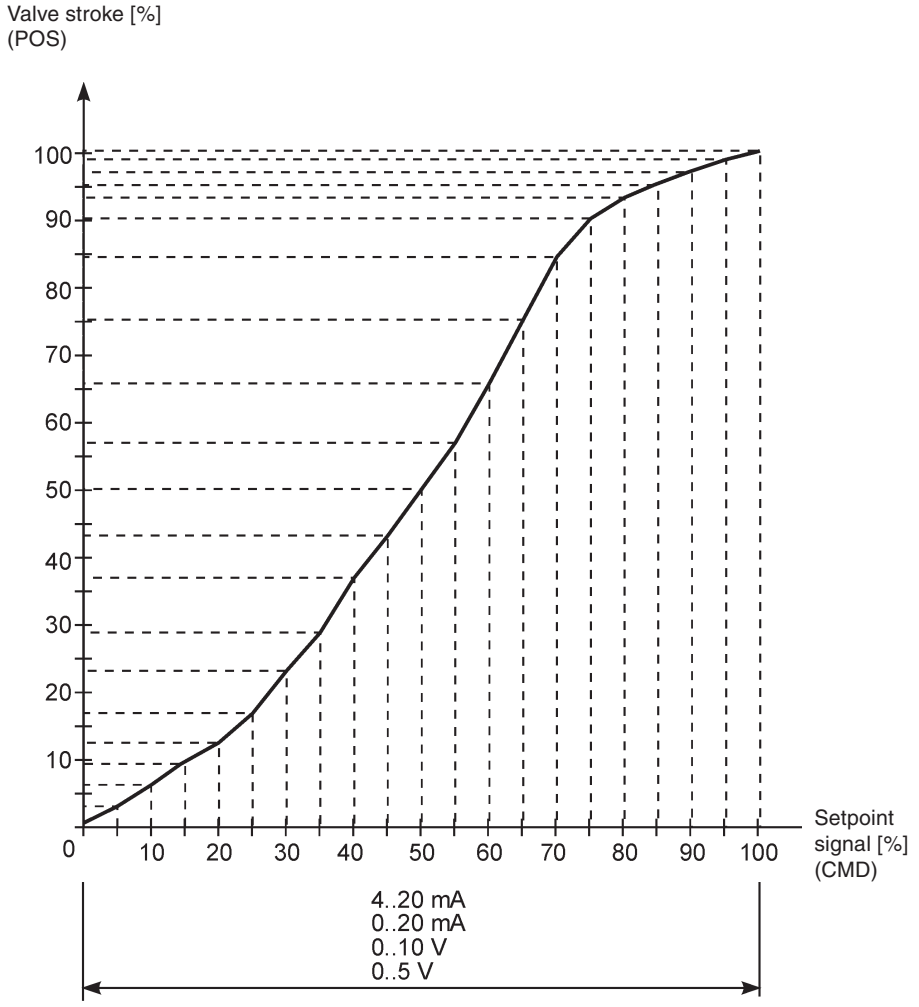

Entering the fixed points:

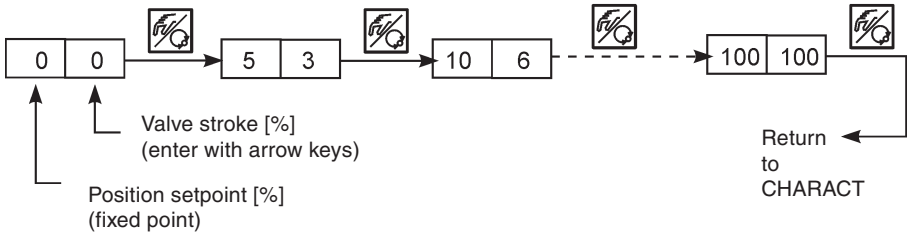

NOTE The fixed points that were entered should be noted in the table in the Appendix.

MAN 1000010084 EN Version: K Status: RL (released | freigegeben) printed: 23.04.2009

CUTOFF

Tight closure function for positioners or process controllers

Factory setting: *CUT* ⊥ = 0 %; *CUT* ⊤ = 100 %

This function causes the valve to close tightly outside the control range. Enter here the limits in percent for the position setpoint (CMD) or, with activated PID controller either for the position setpoint or for the process setpoint SP, from which the actuator is to be completely vented or pressurized. In the case of the fast pressurization/venting version, two valves are driven in each case in order to obtain complete venting more rapidly. Opening or resumption of controlled operation is performed with a hysteresis of 1 %.
If the process valve is in the region of tight closure, there appears in the display a flashing MIN or MAX symbol.

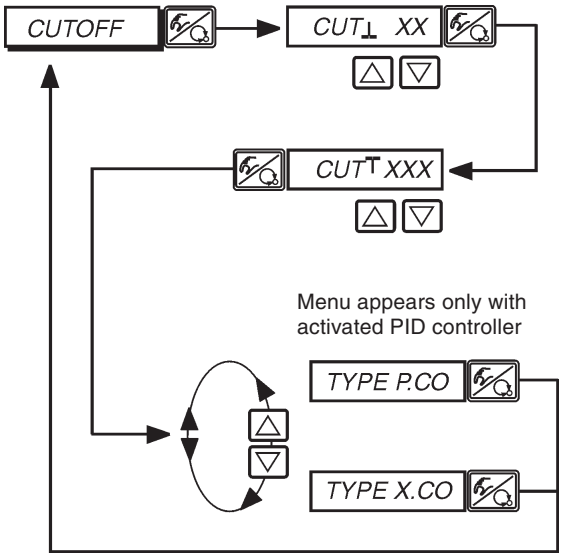

Tight-closing threshold exhaust (0 = inactive); setting range: 0..25 %.

Tight-closing threshold pressurize (100 = inactive); setting range: 75 ... 100 %

Limits refer to process setpoint (SP)

Limits refer to position setpoint (CMD)

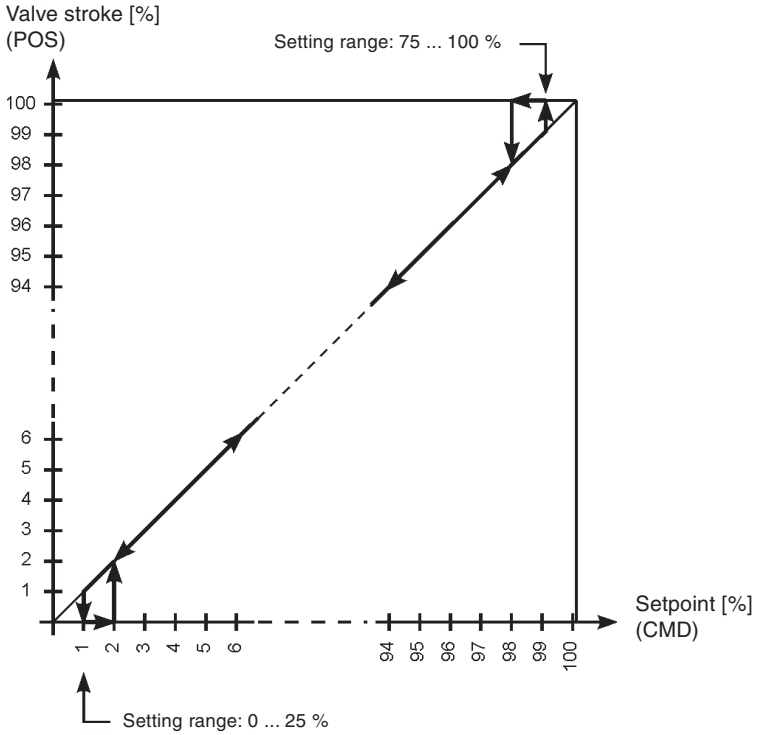

MAN 1000010084 EN Version: K Status: RL (released | freigegeben) printed: 23.04.2009

DIR.CMD

Sense of action or direction of the positioner setpoint

Factory setting: *DIR.CRISE*

With this supplementary function, you can set the sense of action between the input signal (INP) and the setpoint position (CMD) of the actuator.

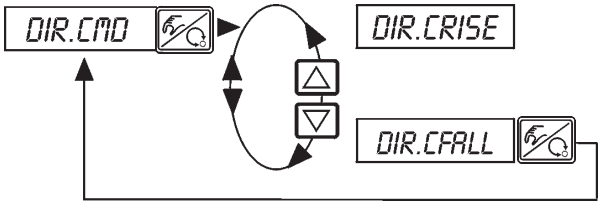

Direct sense of action
(e.g. 4 mA or 0 V ➔ 0 %,
20 mA or 5/10 V ➔ 100%)

Inverse sense of action
(e.g. 4 mA or 0 V ➔ 100%,
20 mA or 5/10 V ➔ 0%)

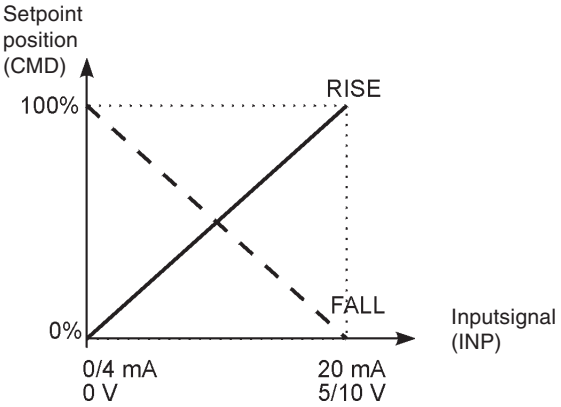

MAN 1000010084 EN Version: K Status: RL (released | freigegeben) printed: 23.04.2009

DIR.ACT

Sense of action or direction of the actuator

Factory setting: *DIR.ARISE*

With this supplementary function, you can set the sense of action between the state of pressurization of the actuator and the actual position (POS).

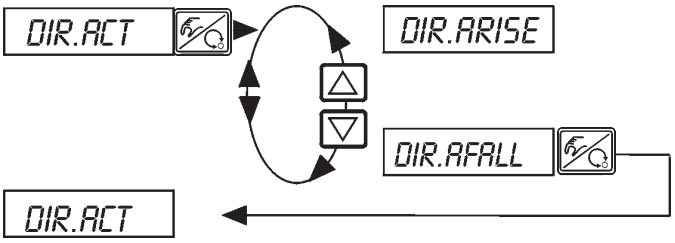

Direct sense of action
(exhausted ➔ 0 %; pressurized ➔ 100 %)

Inverse Wirkungsrichtung
(entlüftet ➔ 100 %; belüftet ➔ 0 %)

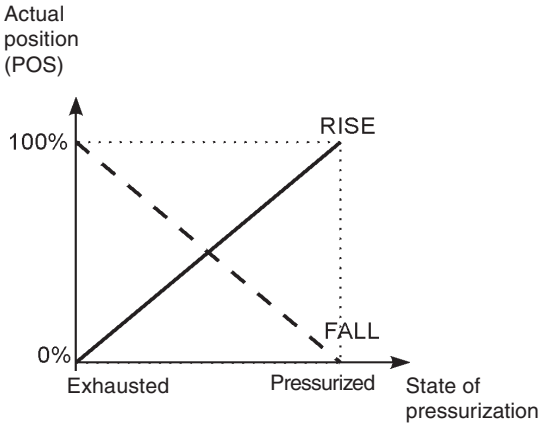

MAN 1000010084 EN Version: K Status: RL (released | freigegeben) printed: 23.04.2009

SPLTRNG

Split range

Split range; min. and max. values of the input signal in % for which the valve traverses the entire stroke

Factory setting: $SR_{\perp}$ = 0 (%); $SR^{\top}$ = 100 (%)

NOTE This function is only effective when operating as a positioner.

This supplementary function limits the Position setpoint range of the TOP Control Continuous by specifying a minimum and maximum values. In this way it is possible to distribute the standard signal range used (4..20 mA, 0..20 mA, 0..10 V or 0..5 V) over several TOP Control Continuous (with or without overlap). Several valves can thus be used as **final control elements** either alternating or, if the setpoint ranges overlap, **simultaneously.**

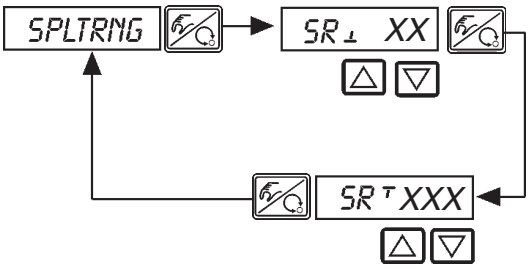

Entering the minimum value of the input signal in % (0 ... 75 (%) of the standard signal range)

Entering the maximum value of the input signal in % (25 ... 100 (%) of the standard signal rage)

Splitting the standard signal range into tow setpoint ranges

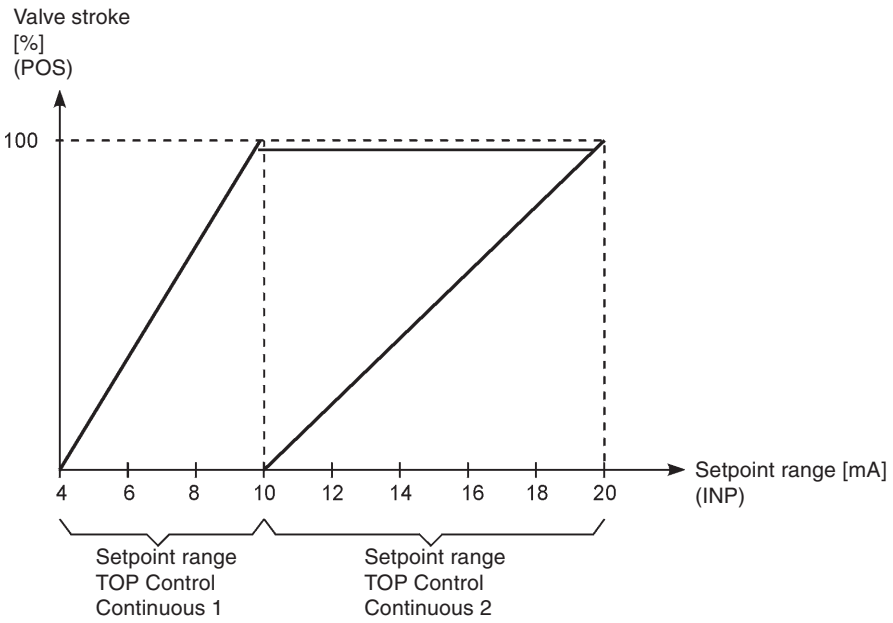

X.LIMIT

Limitation of the mechanical stroke range

Factory setting: $LIM_{\perp}$ = 0%, $LIM^{\top}$ = 100%

This supplementary function limits the (physical) stroke to preset % values (minimum and maximum). The range of the limited stroke is thereby set to 100 %.If the limited stroke range is left during operation, negative or positive POS values greater than 100 % are displayed.

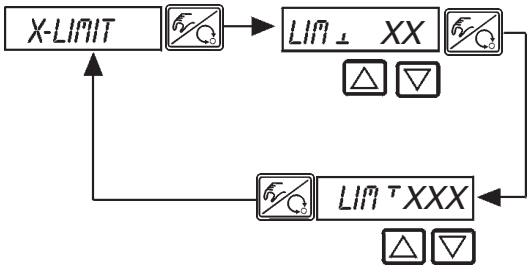

Entering the start value of the stroke range in %, 0 ... 50 % of the overall stroke

Entering the end value of the stroke rage in %, 50 ... 100 % of the overall stroke

The minimum separation between $LIM_{\perp}$ and $LIM^{\top}$ is 50 %.

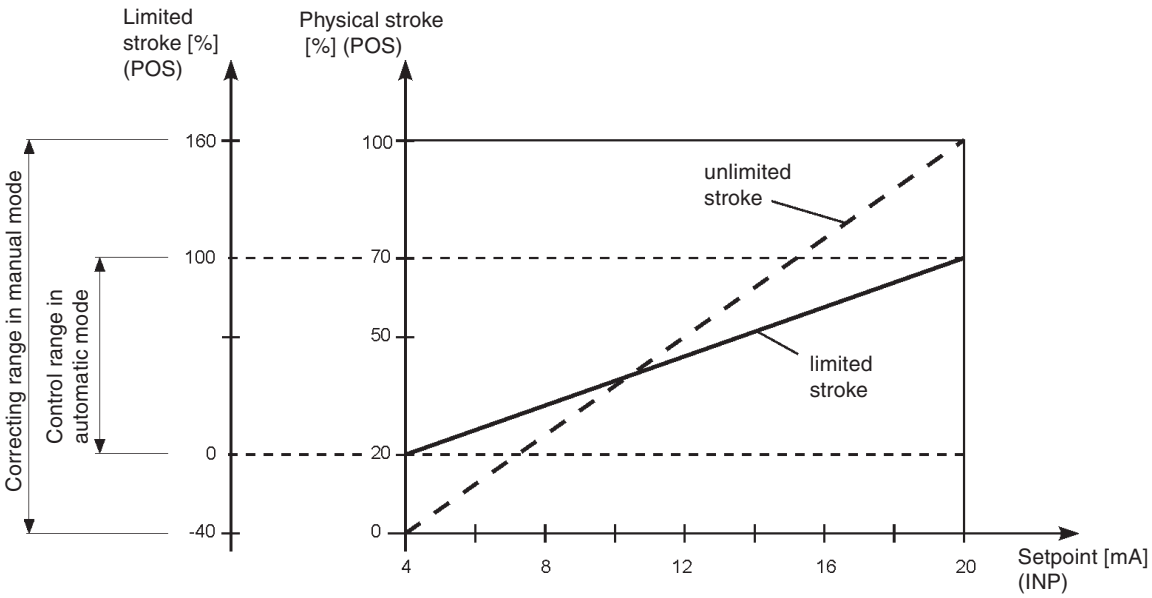

MAN 1000010084 EN Version: K Status: RL (released | freigegeben) printed: 23.04.2009

X.TIME

Limitation of the correcting speed

Factory setting: 1 s

NOTE When executing the function *X.TUNE*, the minimum opening and closing time for *T.OPN* and *T.CLS* is automatically entered for the full stroke. In this way it is possible to traverse at maximum speed.

If the correcting speed is to be limited, values can be entered for *T:OPN* and *T.CLS* that lie between the minimum values determined by *X:TUNE* and 60 s.

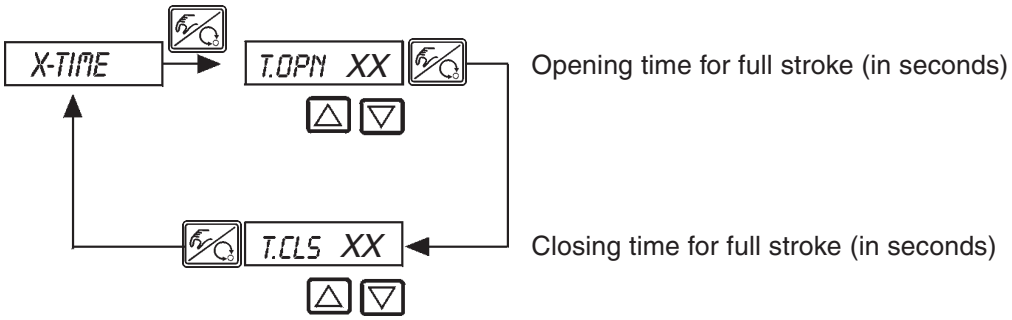

Effect of limitation of the opening speed after a step in the setpoint

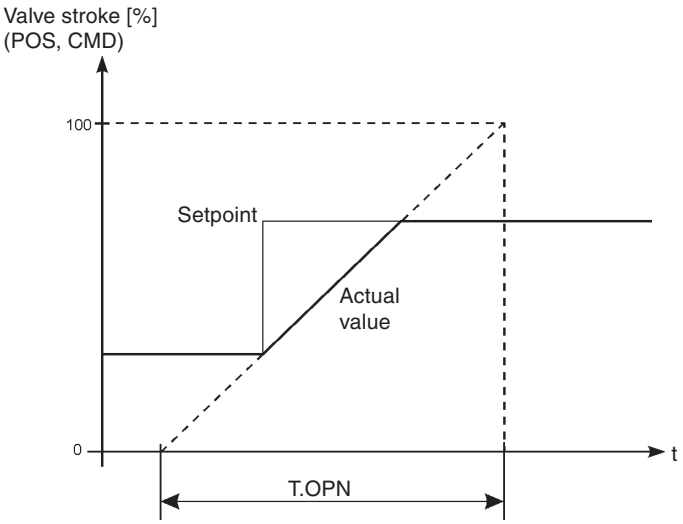

NOTE If positioning times < 1 s are determined from the *AUTOTUNE, X.TIME* is automatically copied to the main menu and the relevant value is set to 1 s.

MAN 1000010084 EN Version: K Status: RL (released | freigegeben) printed: 23.04.2009

X.CONTRL

Parametrization of the positioner

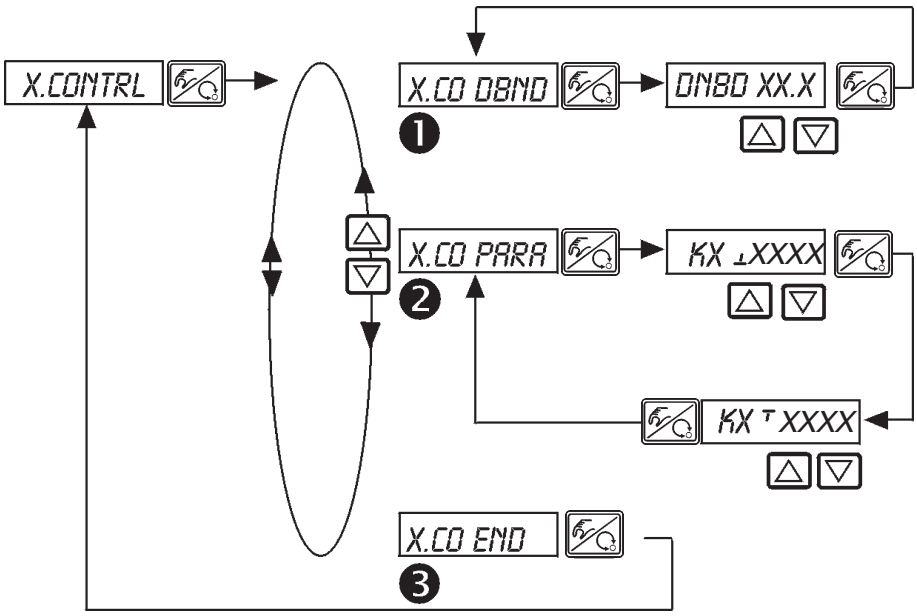

❶ **Insensitivity range (dead band) of the positioner**

Entry of the dead band in %, referred to the scaled stroke range; i.e. *LIM⊤* minus *LIM⊥* (see function *X.LIMIT*). This function assures that the positioner cuts in only above a certain control difference. The function reduces wear on the solenoid valves in the TOP Control Continuous and the pneumatic actuator.

NOTE If, during execution of *X.TUNE (AUTOTUNE* of the positioner*)*, the supplementary function *X.CONTRL* is in the main menu, the dead band *X.CO DBND* is automatically determined in dependence on the frictional behaviour of the positioning mechanism. The value resulting is a guide value. It can be readjusted manually.

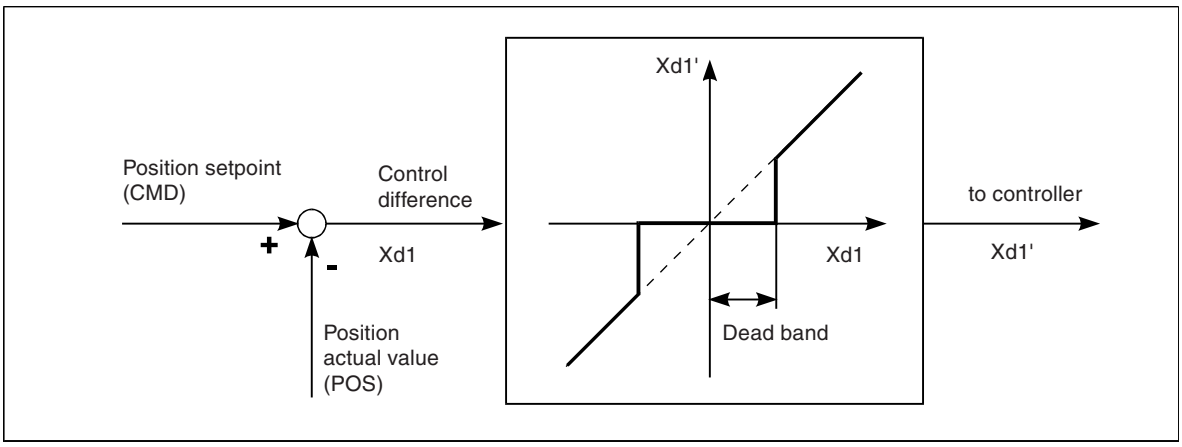

❷ **Parameters of the positioner**

KX ⊥ XX.X	Gain factor of the positioner (to close the valve)
KX ⊤ XX.X	Gain factor of the positioner (to open the valve)

❸ **End** of parametrization of positioner. Jump back to *X.CONTRL.*

MAN 1000010084 EN Version: K Status: RL (released | freigegeben) printed: 23.04.2009

CODE

Code protection for the settings

Factory setting: *CODE 0000*

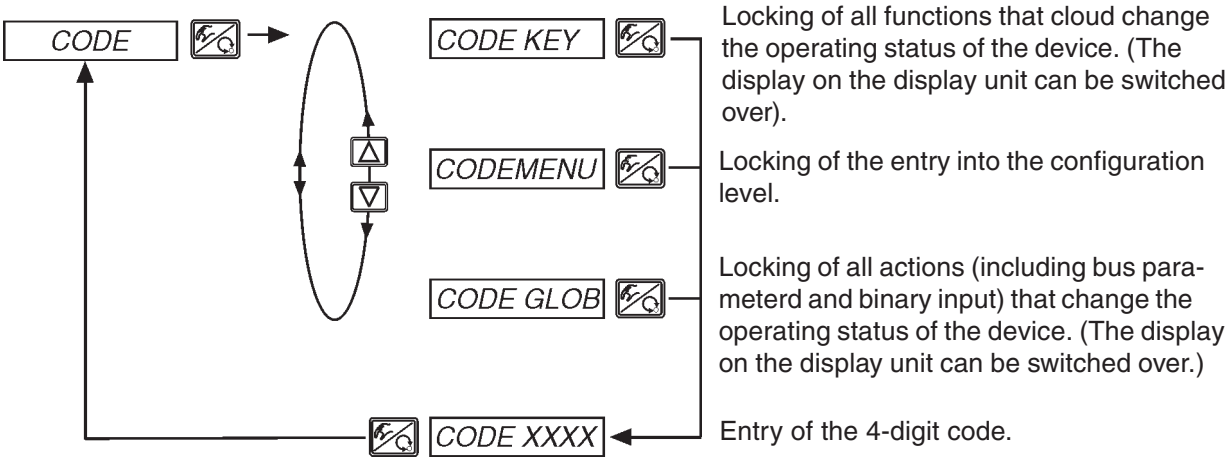

If the code protection is activated, entry of the code will be demanded on every protected operative manipulation:

Change the flasching digit

Confirm the digit and switch to next digit

MAN 1000010084 EN Version: K Status: RL (released | freigegeben) printed: 23.04.2009

SAFEPOS

Entering the safety position

Factory setting: 0 %

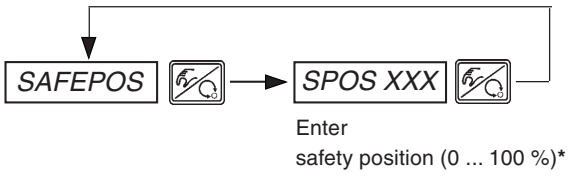

* When the safety position is 0 % or 100 %, the actuator will be **fully** vented or pressurized as soon as the safety position is activated int he supplementary function *SIG-ERR* or *BIN-IN*.

ATTENTION! The safety position set is only moved to when a corresponding signal is present at the binary input (for configuration see *BIN-IN*), or on occurrence of a signal error (for configuration see *SIG-ERR*).

This function is executed only in the AUTOMATIC mode.

With the fast pressurize / fast vent variant, two valves are driven in each case to obtain faster pressurizing and venting.

MAN 1000010084 EN Version: K Status: RL (released | freigegeben) printed: 23.04.2009

SIG-ERR

Configuration of error recognition signal level

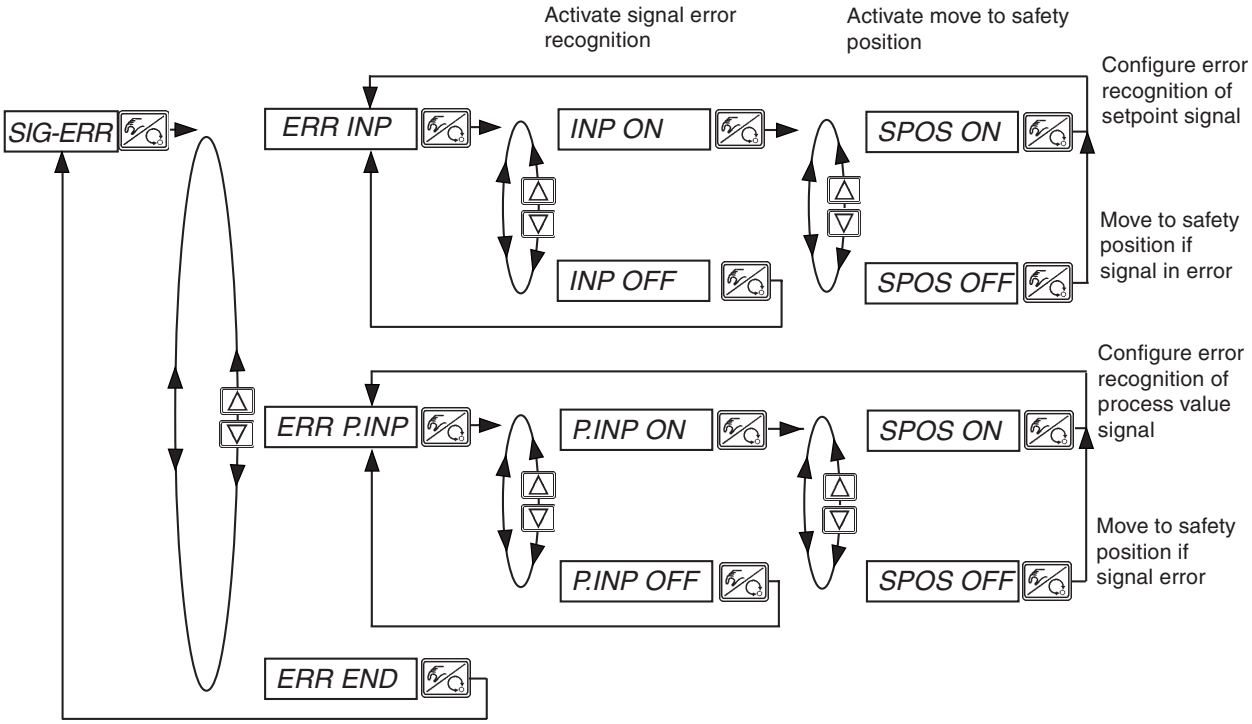

When signal error recognition is activated, the error is displayed (see chapter: *Maintenance and Error Correction*).

NOTE

Error recognition
Error recognition can be selected only with 4 ... 20 mA, Pt100 and P1'P2 signals.
4 ... 20 mA
Error in input signal ≤ 3.5 mA (± 0.5 % of end value, hysteresis 0.5 % of end value)
Pt100
Error in input signal ≥ 225 °C (± 0.5 % of end value, hysteresis 0.5 % of end value)
P1'P2
Error in input signal ≤ 3.5 mA (± 0.5 % of end value, hysteresis 0.5 % of end value)

If other types of signal are selected or if the process controller is unactivated, the respective branch of menu will be faded out. If because of this configuration neither of the error recognition modes is possible, the message ***NOT.AVAIL*** is displayed in the selection menu.

Safety position *SPOS ON*

If *SPOS ON* is set, the following configurations may occur:

Activated menu item *SAFEPOS*
On error recognition the actuatur moves to the position set under *SAFEPOS.*

Deactivated menu item *SAFEPOS*
On error recognition the actuator moves to the end position which it would assume in the zero-voltage state.

MAN 1000010084 EN Version: K Status: RL (released | freigegeben) printed: 23.04.2009

BIN-IN

Activating the binary input

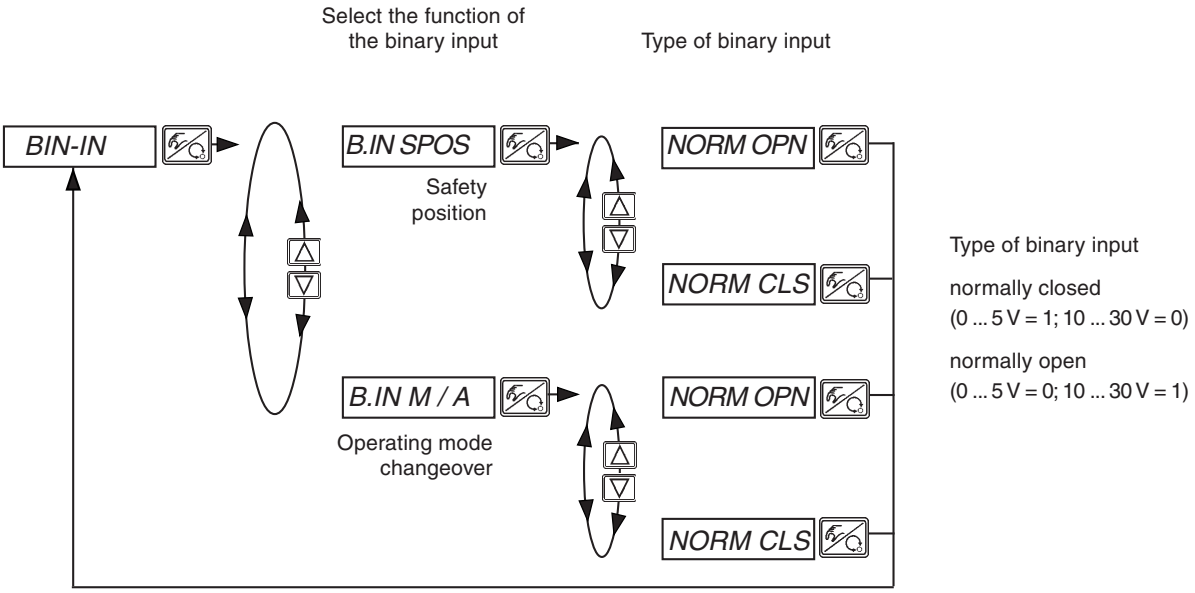

Safety position *B.IN SPOS*

Moving to a safety position.

Activated menu item *SAFEPOS*
The actuator moves to the position set under *SAFEPOS*.

Deactivated menu item *SAFEPOS*
The actuator moves to the end position which it would assume in the zero-voltage state.

Switching over the operating mode *B.IN M / A*

Switching over the operating mode into MANUAL or AUTOMATIC.

Binary input = 0 → Operating mode AUTOMATIC

Binary input = 1 → Operating mode MANUAL

If the operating mode switchover has been selected, you can then no longer switch over the operating mode using the MANUAL/AUTOMATIC key.

MAN 1000010084 EN Version: K Status: RL (released | freigegeben) printed: 23.04.2009

OUTPUT (Option)

Configuration of the outputs

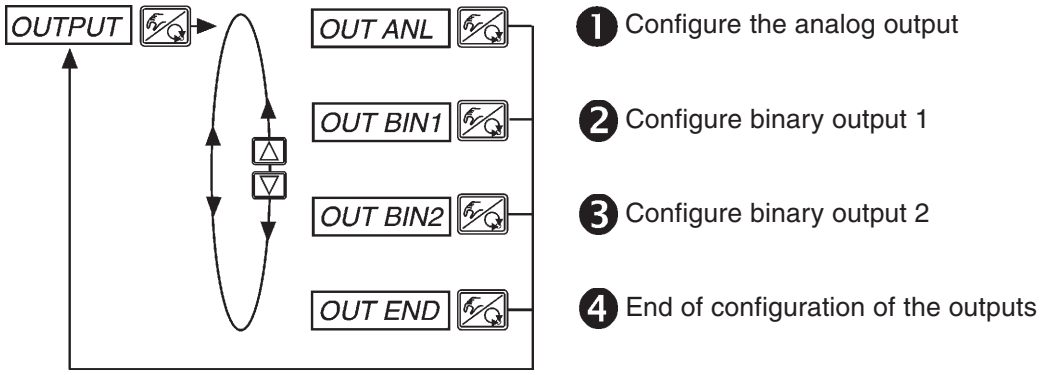

1 *OUT ANL* - Standard signal for the analog position output

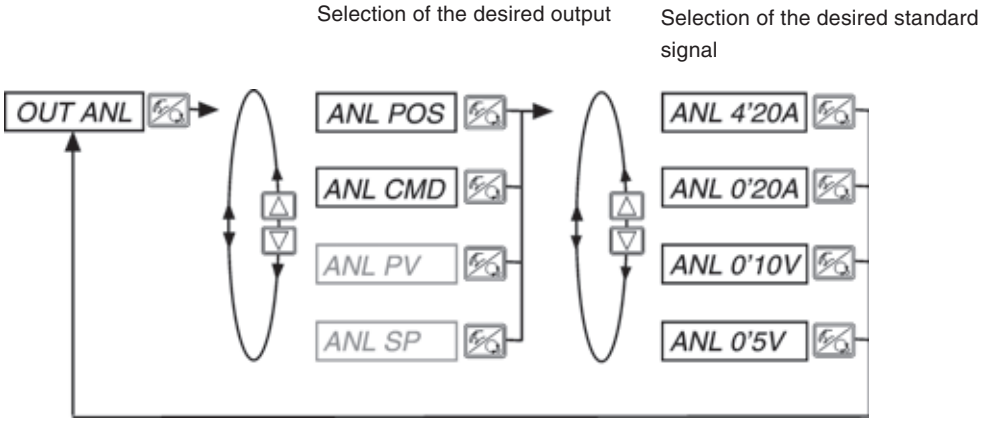

NOTE The signal types shown in gray are only selectable with active process controller.

MAN 1000010084 EN Version: K Status: RL (released | freigegeben) printed: 23.04.2009

❷ *OUT BIN1* - Configuring binary output 1

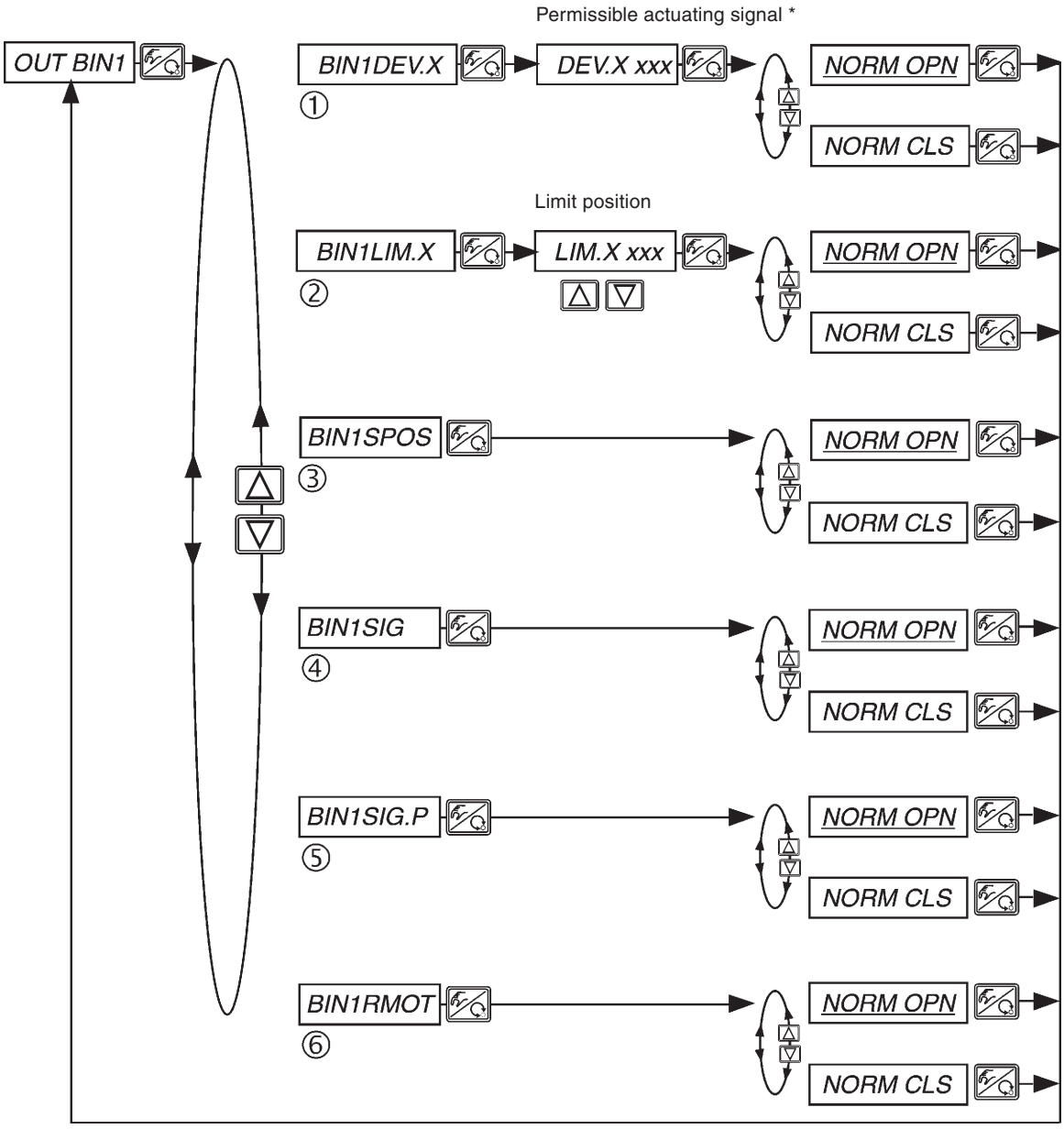

NOTE

NORM CLS (NC) "Normally Closed" output, in switched state *low* (≅ 0 V)
NORM OPN (NO) "Normally Open" output, in switched state *high* (≅ 24 V)

MAN 1000010084 EN Version: K Status: RL (released | freigegeben) printed: 23.04.2009

①
BIN1 DEV.X
Selection: alarm output for too great an actuation signal from the positioner

***** The permissible actuating signal *DEV.X XXX* shall not be smaller than dead band.

②
BIN1 LIM.X
Selection: binary position output
LIM.X XXX - limit position

OUT BIN1	*NORM OPN*	*NORM CLS*
POS > LIM	0 V	24 V
POS < LIM	24 V	0 V

③
BIN1 SPOS
Selection: actuator in safety position

④
BIN1 SIG
Selection: error message setpoint signal

⑤
BIN1 SIG.P
Selection: error message process value signal

⑥
BIN1 RMOT
Selection: operating mode AUTOMATIC and EXTERNAL *Setpoint* activated

OUT BIN1	*NORM OPN*	*NORM CLS*
Operating mode *AUTO +* External set-value	0 V	24 V
Operating mode *MANUAL* or internal set-value	24 V	0 V

MAN 1000010084 EN Version: K Status: RL (released | freigegeben) printed: 23.04.2009

❸ *OUT BIN2* - Configuring binary output 2

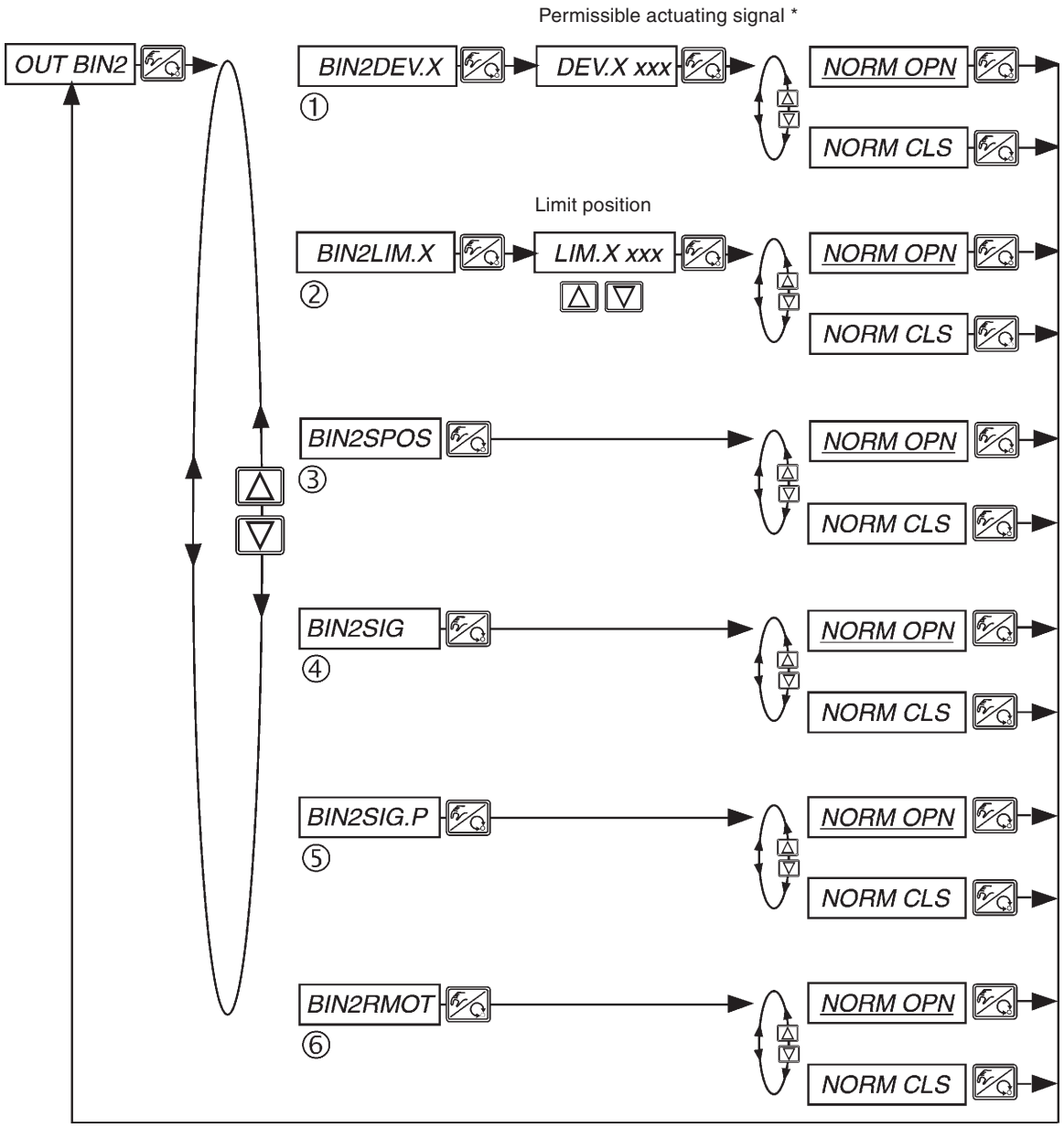

NOTE

NORM CLS (NC) "Normally Closed" output, in switched state *low* (≅ 0 V)
NORM OPN (NO) "Normally Open" output, in switched state *high* (≅ 24 V)

MAN 1000010084 EN Version: K Status: RL (released | freigegeben) printed: 23.04.2009

①
BIN2 DEV.X
Selection: alarm output for too great an actuation signal from the positioner

***** The permissible actuating signal *DEV.X XXX* shall not be smaller than dead band.

②
BIN2 LIM.X
Selection: binary position output
LIM.X XXX - limit position

OUT BIN2	*NORM OPN*	*NORM CLS*
POS > LIM	0 V	24 V
POS < LIM	24 V	0 V

③
BIN2 SPOS
Selection: actuator in safety position

④
BIN2 SIG
Selection: error message setpoint signal

⑤
BIN2 SIG.P
Selection: error message process value signal

⑥
BIN2 RMOT
Selection: operating mode AUTOMATIC and EXTERNAL *Setpoint* activated

OUT BIN2	*NORM OPN*	*NORM CLS*
Operating mode *AUTO +* external set-value	0 V	24 V
Operating mode *MANUAL* or internal set-value	24 V	0 V

MAN 1000010084 EN Version: K Status: RL (released | freigegeben) printed: 23.04.2009

CAL.USER

Calibration of the actual value display, the inputs for position setpoint, process setpoint, process actual value and of the K factor for the valve

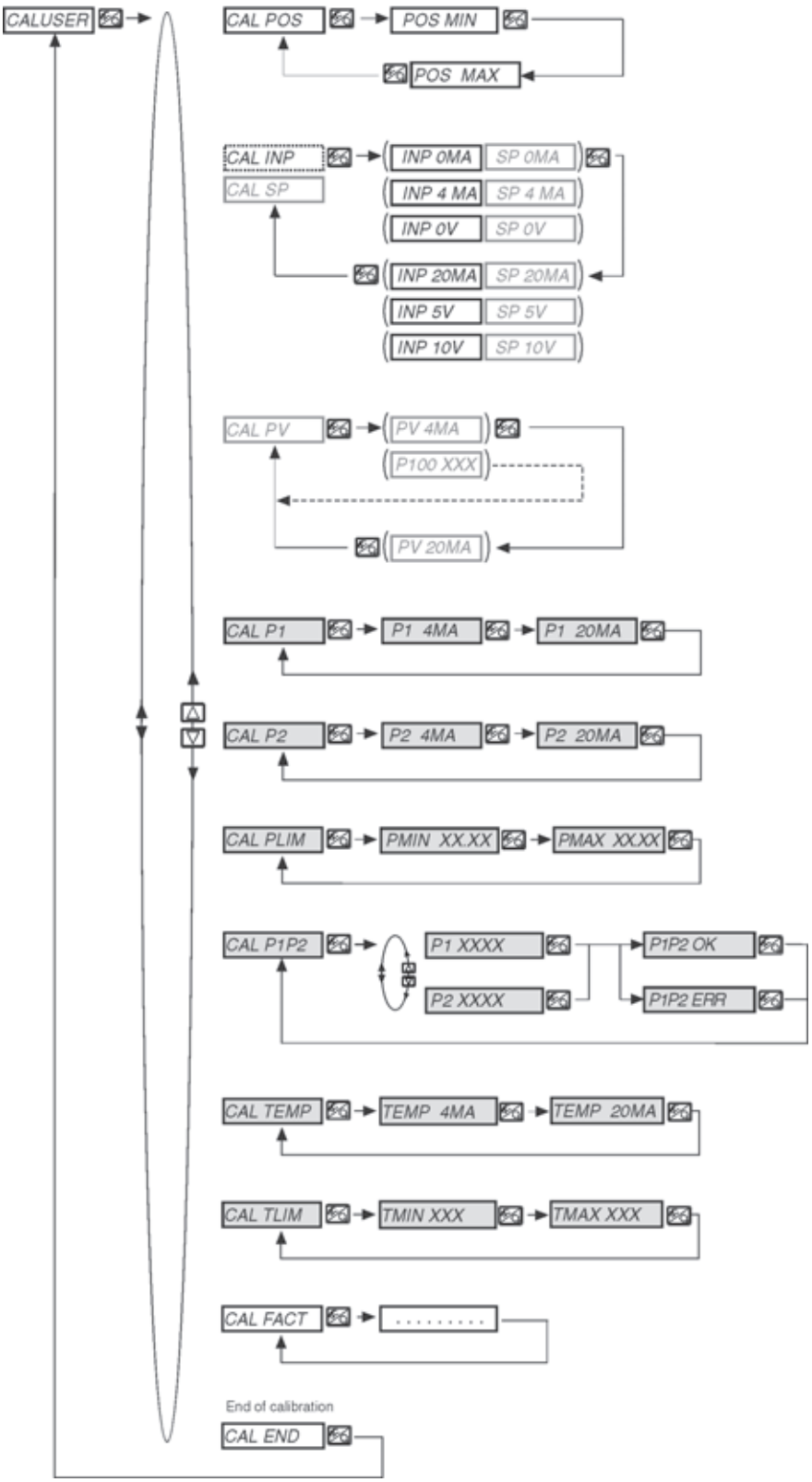

NOTE With the removal of the additional function *CALUSER,* the factory calibration will be re-established.

MAN 1000010084 EN Version: K Status: RL (released | freigegeben) printed: 23.04.2009

NOTE

The signal types **shown in grey** can be selected only with the process controller activated.

The **signal surrounded by a dotted line** can be selected only with the process controller deactivated.

The **signal types in brackets** are only shown in this menu; they cannot be changed here. The type of signal shown is that which you have selected in the associated menus:
CAL INP (CAL SP) Display of the selection in the menu *INPUT*
CAL PV Display of the selection in the menu *P.CONTROL* / *P.CO INP*

The **signal types over a grey background** can be selected only with the option flow rate controller.

①

CAL.POS
Calibration of the position display (0 - 100 %)

Storage of the minimum position:

Move to minimum position via arrow keys and confirm by pressing the MANUAL / AUTOMATIC key.

Storage of the maximum position:

Move to maximum position via arrow keys and confirm by pressing the MANUAL / AUTOMATIC key.

②

CAL INP
Calibration of the position setpoint (4 ... 20 mA; 0 ... 20 mA; 0 ... 5 V; 0 ... 10 V)

CAL SP
Calibration of the process setpoint (4 ... 20 mA; 0 ... 20 mA; 0 ... 5 V; 0 ... 10 V)

Menu point does not appear with selection of actual value frequency!

Storage of the minimum input signal (0 mA; 4 mA; 0 V):

Apply the minimum value of the standard signal to the input and confirm ist by pressing the MANUAL/ AUTOMATIC key.

Storage of the maximum input signal (20 mA; 5 V; 10 V):

Apply the maximum value of the standard signal to the input and confirm it by pressing the MANUAL/ AUTOMATIC key.

③

CAL PV

Calibration of the process setpoint (4 ... 20 mA; Pt-100)

This menu item does not appear on selection of frequency setpoint

Select 4 ... 20 mA:

Apply the minimum value of the process setpoint signal to the input and confirm the value by pressing the MANUAL/AUTOMATIC key.
Apply the maximum value of the process setpoint signal to the input and confirm the value by pressing the MANUAL/AUTOMATIC key.

Select Pt-100:

Alter the value displayed using the arrow keys until thedisplay on the SIDE Control S/HART agrees with that on the reference measuring instrument. Then confirm the value by pressing the MANUAL/ AUTOMATIC key.

MAN 1000010084 EN Version: K Status: RL (released | freigegeben) printed: 23.04.2009

④ + ⑤ + ⑧

CAL P1, CAL P2, CAL TEMP

Calibrating the transmitter inputs at the flow rate controller (4 ... 20 mA)

Apply 4 mA to the input to be calibrated (p1/p2/temperature) and confirm the value by pressing the MANUAL/AUTOMATIC key.

Apply 20 mA to the input to be calibrated (p1/p2/temperature) and confirm the value by pressing the MANUAL/AUTOMATIC key.

At the inputs p1/p2, 4 mA corresponds to a pressure of 0.0 bar (rel).
20 mA corresponds to a pressure of 10.0 bar (rel) or the end value set under ***CAL PLIM***.

At the temperature input, 4 mA correspond to a temperature of 0°C.
20 mA correspond to a temperature of 150°C or the end value set under ***CAL TLIM***.

⑥ + ⑨

CAL PLIM, CAL TLIM
Setting up the sensor measurement range

First, enter the lower pressure/temperature value that corresponds to the 4 mA transmitter signal. Then enter the upper pressure/temperature value that corresponds to the 20 mA transmitter signal.

PMIN must be within the range -1.01 ... 15.0 bar (rel), *PMAX* in the range 0.0 ... 16.0 bar (rel).
TMIN and *TMAX* must be within the 0 ... 150 °C range.

⑦

CAL P1P2
Balancing the pressure transmitters

The pressure transmitters p1 and p2 can be balanced in order to increase the measurement accuracy at small pressure differences. To do this, the feed line behind process valve must be closed, and a constant pressure must be applied to the controller unit.
With a pressure < 10 % of the sensor measurement range, the zero-point can be balanced,
with a pressure > 55 % of the sensor measurement range, the upper calibration value.

Change the display between p1 and p2 using the arrow keys.
If you press the MANUAL/AUTOMATIC key, the displayed value will be confirmed and the other value will be matched to ist.
The process will be cancelled with the message ***P1P2 ERR*** if the pressure lies between 10 % and 55 % of the des sensor measurement range or if the difference between p1 and p2 > 1.5 %.

⑩

CAL FACT
Reset the settings under *CAL.USER* to the factory settings

Hold down the MANUAL/AUTOMATIC key until the countdown has expired.

MAN 1000010084 EN Version: K Status: RL (released | freigegeben) printed: 23.04.2009

SETFACT

Resetting to the factory settings

Using this function, all settings made by the user can be reset to the status existing on delivery.

All EEPROM parameters, with the exception of the calibration values, are reset to the default values. Following this a hardware reset is executed.

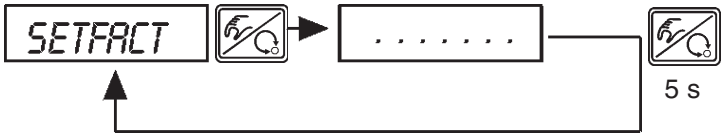

To initiate the function, hold the MANUAL/AUTOMATIC key depressed for ca. 5 s until the countdown has finished.

MAN 1000010084 EN Version: K Status: RL (released | freigegeben) printed: 23.04.2009

Operating the process

Each time after switching on the voltage supply, the TOP Control Continuous is automatically in the process operating level. To get there from the configuration level, confirm the menu item END by pressing the MANUAL/AUTOMATIC key.

In the process operating level, the normal controlled operation is executed and monitored (in the AUTOMATIC mode), and the valve opened or closed by hand (MANUAL mode).

Changeover between operating modes

Operate the MANUAL/AUTOMATIC key to switch between the MANUAL and AUTOMATIC modes.

5 sec

Both in the MANUAL and the AUTOMATIC modes, you can change to the configuration level by pressing the MANUAL/AUTOMATIC key for longer than 5 seconds. On switching back to the process operating level, the operating mode is resumed that was set before switching over.

Operating mode	yellow LED in the MANUAL/AUTOMATIC key	Display
AUTOMATIC	flashes	An apostrophe (') runs continuously from left to right.
MANUAL	off	-

MAN 1000010084 EN Version: K Status: RL (released | freigegeben) printed: 23.04.2009

Operating mode AUTOMATIC

(yellow LED flashes)

In the AUTOMATIC mode, normal controlled operation is executed and monitored.

Meaning of the keys in the AUTOMATIC mode:

△ or ▽ Switch over the display

△ or ▽ > 3 s Change the process setpoint:
with configured supplementary functions *P.CONTRL / P.CO SETP / SETP INT* and display set to *SP*

Display of the AUTOMATIC mode

With regard to the positioner, the following parameters can be displayed:

- Actual position of valve actuator *POS__XXX* (0 ... 100 %)
- Setpoint position of valve actuator after rescaling through optionally activated split-range function or correction characteristic: *CMD__XXX* (0 ... 100 %)
- Input signal for setpoint position: *INP__XXX* (0 ... 5/10 V or 0/4 ... 20 mA)
- Temperature inside housing of TOP Control Continuous *TEMP_XX.X* (in °C)

By pressing the arrow keys, you can switch between these 4 display options.

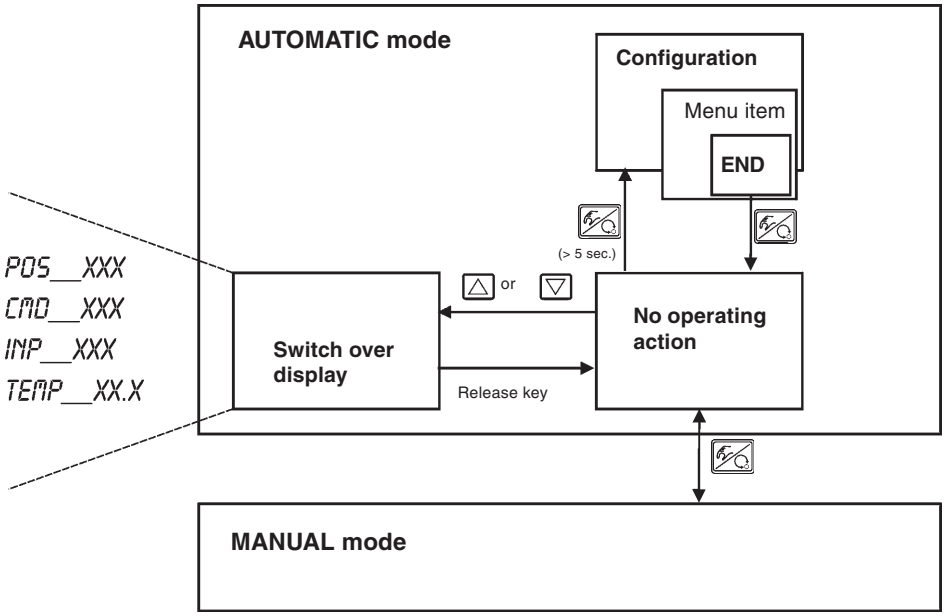

NOTE If the device is in the safety position (for the relevant configuration, see menu item *BIN-IN* or *SIG-ERR), SAFE XXX* appears in the display.
If the menu item *CUTOFF* is activated and the process vave is in the tight-closing range, a flashing *MIN* or *MAX* symbol appears in the display.

MAN 1000010084 EN Version: K Status: RL (released | freigegeben) printed: 23.04.2009

Operating mode MANUAL

(yellow LED off)
In the manual mode, the valve can be opened and closed by hand.

Meaning of the keys in the MANUAL mode:

Press the △ key in the MANUAL mode:
Pressurization of the actuator
SFA: valve opens
SFB: valve closes
SFI: port 2.1 pressurized

Press the ▽ key in the MANUAL mode:
Venting of the actuator
SFA: valve closes
SFB: valve opens
SFI: port 2.2 pressurized

Hold down the △ key and simultaneously press the ▽:
Fast pressurization

Hold down the ▽ key and simultaneously press the △:
Fast venting

NOTE

SFA: actuator closing by spring force
SFA: actuator opening by spring force
SFI: actuator with double action

Displays of the MANUAL mode:

The last display set in the AUTOMATIC mode is shown.
By selecting *POS_XXX*, the actual position of the valve actuator can be checked.

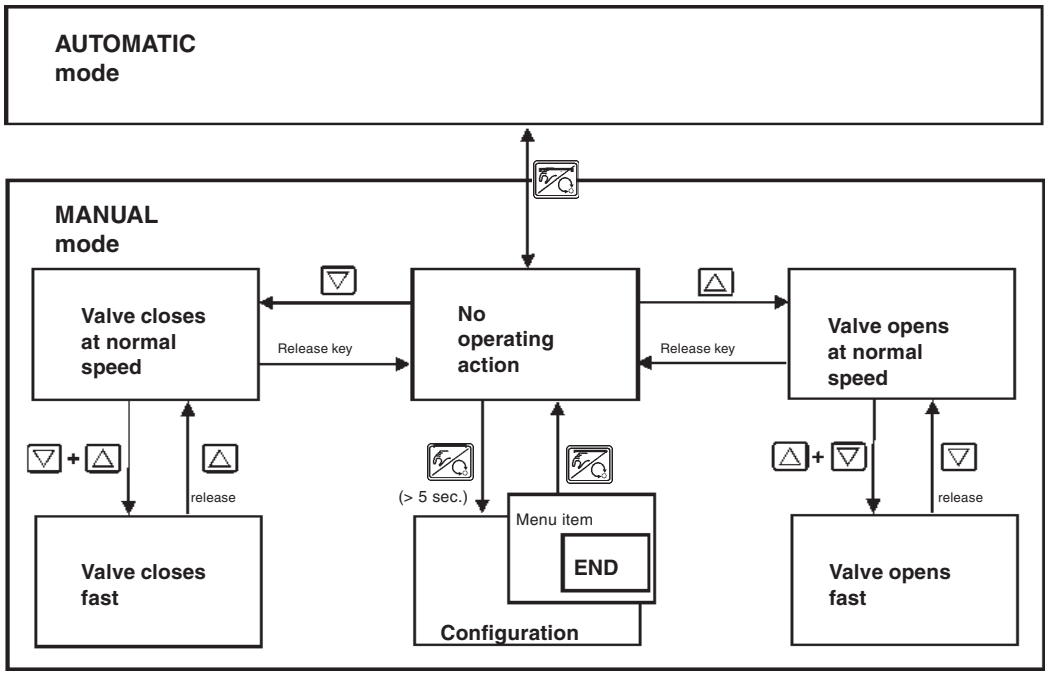

OPERATING THE PROCESS CONTROLLER

MAN 1000010084 EN Version: K Status: RL (released | freigegeben) printed: 23.04.2009

Factory settings on the process controller

Function	Factory setting	Function	Factory setting
P.CONTRL		*P.CONTRL with flow rate controller*	
P.CO DBND	*1 %*	*P.CO DBND*	*1 %*
P.CO PARA		*P.CO PARA*	
KP	*1.00*	*KP*	*1.0*
TN	*999.9*	*TN*	*999.9,*
TV	*0.0*	*TV*	*0.0*
X0	*0*	*X0*	*0*
P.CO SETP	*SETP INT*	*P.CO SETP*	*SETP INT*
P.CO INP	*INP 4´20 A*	*P.CO INP*	*INP P1'P2*
P.CO FILT	*0*	*P.CO FILT*	*0*
P.CO SCAL	*PV⊥ 000.0, PV⊤ 100.0*	*P.CO SCAL*	*PV⊥ 000.0, PV⊤100.0,*
		P.TYP	*FLOW*
		UNIT	*M3/H,*
		TEMP	*MAN*
		DENS	*1.293,*
		DIAM	*0025*
P.CO TUNE	*D'ACT*	*P.CO TUNE*	*D'ACT*
P.CO KV	*FACT*	*P.CO KV*	*FACT*

NOTE The functions and factory settings shown in grey are valid for the optional flow rate control.

Setting up a process control system

In order to be able to operate the TOP Control Continuous as a process controller, you must execute the following steps:

A ➔ In all cases, carry out the self-parametrization for positioners (*X.TUNE*).

B ➔ Via the configuration menu, add the supplementary function *P.CONTRL* to the main menu. With the function *P.CONTRL*, the function *P.Q'LIN* is also inserted into the main menu.

C ➔ Call up the basic settings for the process controller under *P.CONTRL.*

D Linearization of the process characteristic:
If you are dealing with a flow control system, the process characteristic can be linearized automatically:
➔ Initiate the function *P.Q'LIN.*

E Self-optimization of the process controller
➔ Activate the function *P.CO TUNE* and initiate self-optimization of the PID parameters of the process controller.

F Activate valve characteristic curve
➔ Initiate the function *P.CO KV* to activate the valve characteristic.

G Read in leakage characteristic
➔ Initiate automatic determination of the leakage characteristic using the functions *P.CO LEAK* ➔ *P.CO MEAS*.

ATTENTION! In all cases, keep to the following sequence! ***X.TUNE ➔ P.Q'LIN ➔ P.CO TUNE***

MAN 1000010084 EN Version: K Status: RL (released | freigegeben) printed: 23.04.2009

Self-parametrization of the positioner - *X.TUNE*

A

The description of the self-optimization of controllers is to be found in the chapter *Operating and Controller Functions / Commissioning and Setting Up as a Positioner / Main Menu for the Settings on Commissioning /* ④ *X.TUNE.*

Supplementary function *P.CONTRL*

B

(see also the section *„Operating the positioner - configuring the supplementary functions“*)

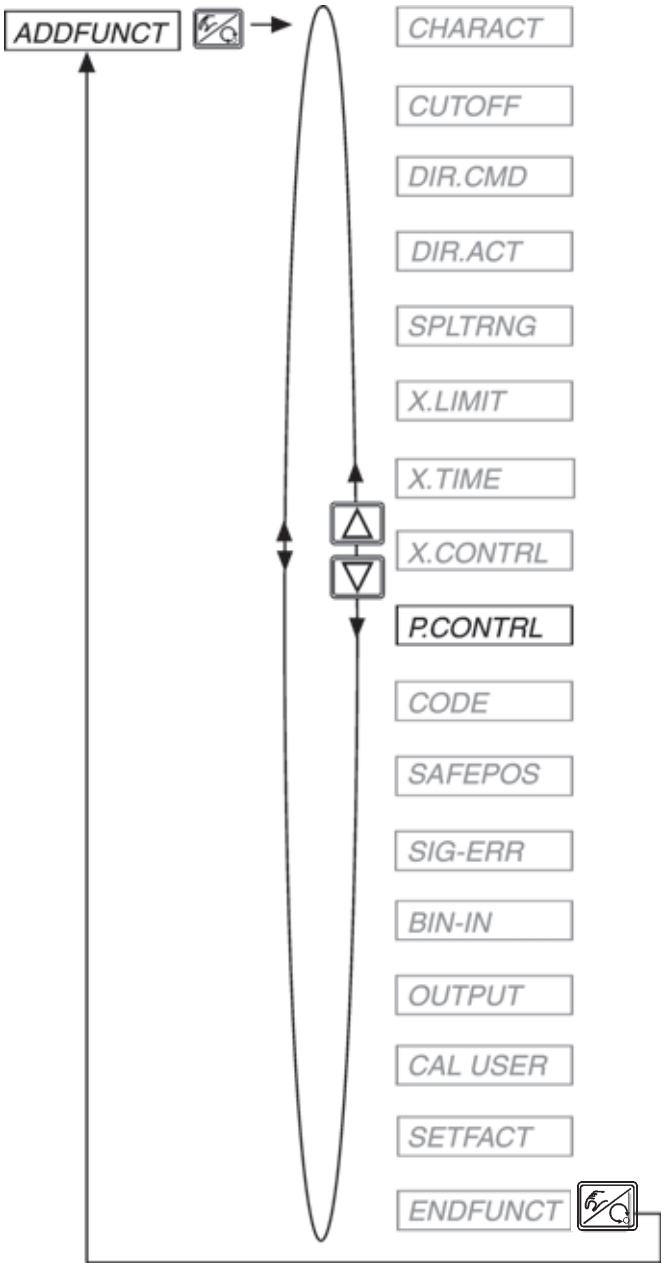

Parametrization of the PID controller

MAN 1000010084 EN Version: K Status: RL (released | freigegeben) printed: 23.04.2009

Basic settings of the function *P.CONTRL*

C

Parametrization of the process controller

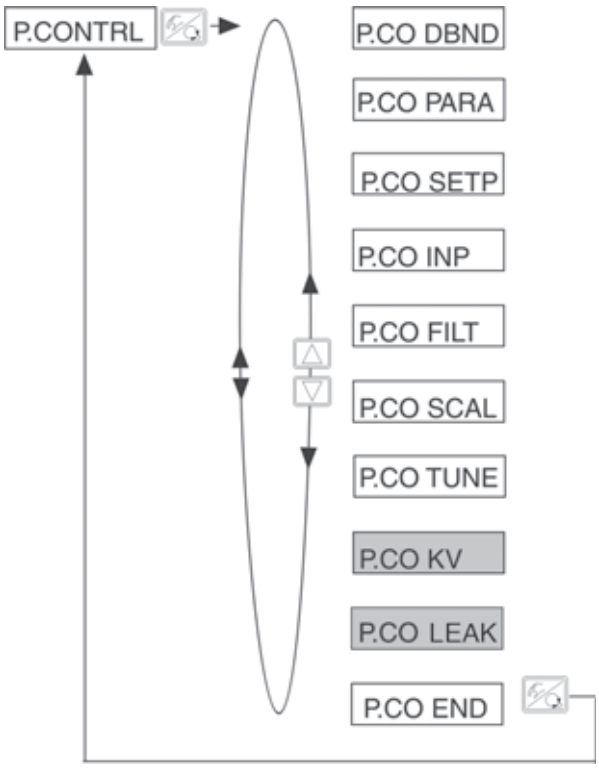

Insensitivity range (dead band) of the PID process controller

Parameters of the PID process controller

Type of setpoint setting

Specification of the signal type for process actual value

Filtering of the process actual value input

Scaling of the process controller

Self-optimization of the process controller (process tune)

kv characteristic curve of process valve

Leakage characteristic for flow rate control

Storage of the new parameters
End of the parametrization

MAN 1000010084 EN Version: K Status: RL (released | freigegeben) printed: 23.04.2009

P.CO - DBND
Insensitivity range (dead band) of the process controller

Factory setting: 1% (refers to the span of the process actual value scaled by means of SCAL *PV*$_{\perp}$ and *PV*$^{\prime}$)

This function assures that the process controller cuts in only above a certain control difference . The function reduces wear on the solenoid valves in the TOP Control Continuous and the pneumatic actuator.

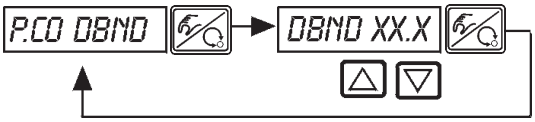

Entering the dead band in %

Insensitivity range with process control

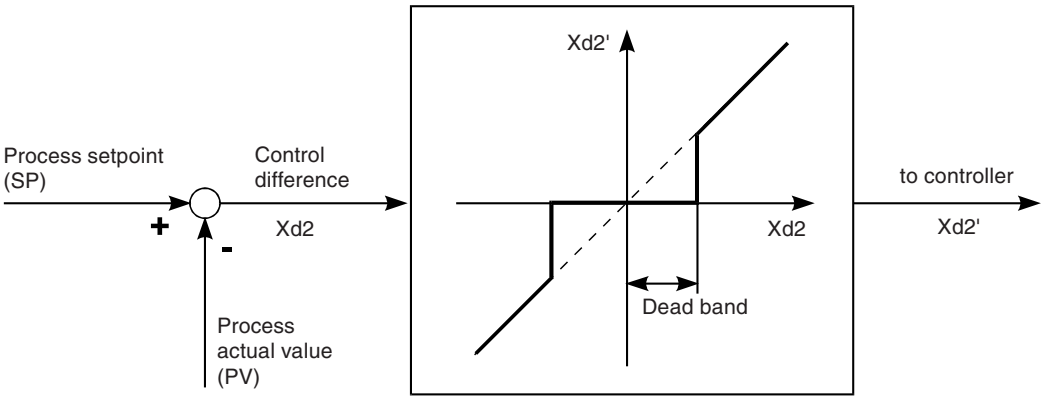

MAN 1000010084 EN Version: K Status: RL (released | freigegeben) printed: 23.04.2009

P.CO - PARA
Parameters of the PID process controller

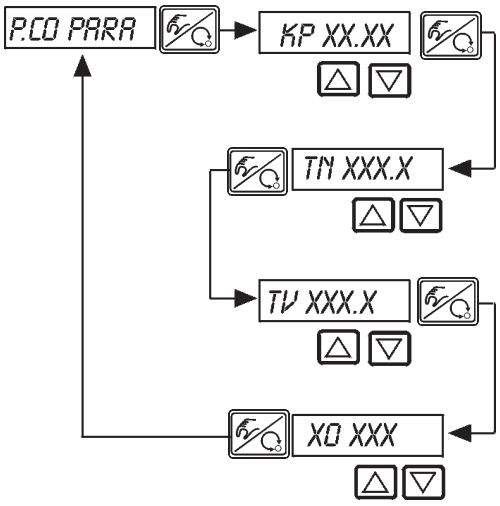

Gain factor of the process controller
0 ... 99.99 (factory setting 1.00)

Reset time
0.5 s ... 999.9 s (factory setting 999.9 s)

Rate time
0 s ... 999.9 s (factory setting 0 s)

Operating point
0.0 ... 100 % (factory setting 0 %)

NOTE

For self-optimization of the PID parameters, see Step E

The parameters entered should be noted in the table in the Appendix *Tables for process controller.*

For definition of the parameters of a PID controllers, see Appendix *General rules.*

P.CO - SETP
Type of setpoint setting (internal/external)

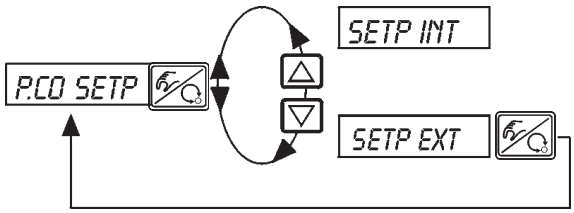

Setpoint setting internally via the keys on the TOP Control Continuous.

Setpoint setting externally via the standard signal input.

MAN 1000010084 EN Version: K Status: RL (released | freigegeben) printed: 23.04.2009

P.CO - INP
Specification of the signal type for process actual value

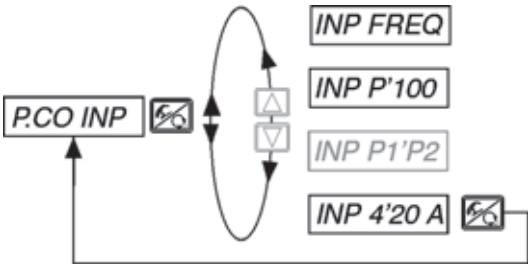

Frequency signal (flow rate) 0 ... 1000 Hz

Connection with Pt100 (temperature)
- 20 °C ... + 220 °C

Configuration for flow rate controller - option

standard signal current 4 ... 20 mA (flow rate, pressure, level)

P.CO - FILT
Filtering of the process actual value input

Factory setting: 0

Valid for all types of process actual value.

Filter has low-pass behavior (PT1).

Range: 0 ... 9

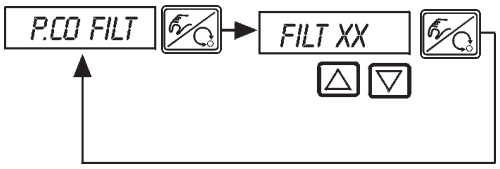

FILT XX
Setting in 10 steps: 0 ... 9

Setting in 10 steps

Setting	Corresponds to limiting frequency (Hz)	Effect
0	10	minimum filtering
1	5	
2	2	
3	1	
4	0.5	
5	0.2	
6	0.1	
7	0.07	
8	0.05	
9	0.03	maximum filtering

MAN 1000010084 EN Version: K Status: RL (released | freigegeben) printed: 23.04.2009

P.CO SCAL
Scaling the process controller on selection of analog input 4 ... 20 mA *(P.CO INP 4 - 20 A)*

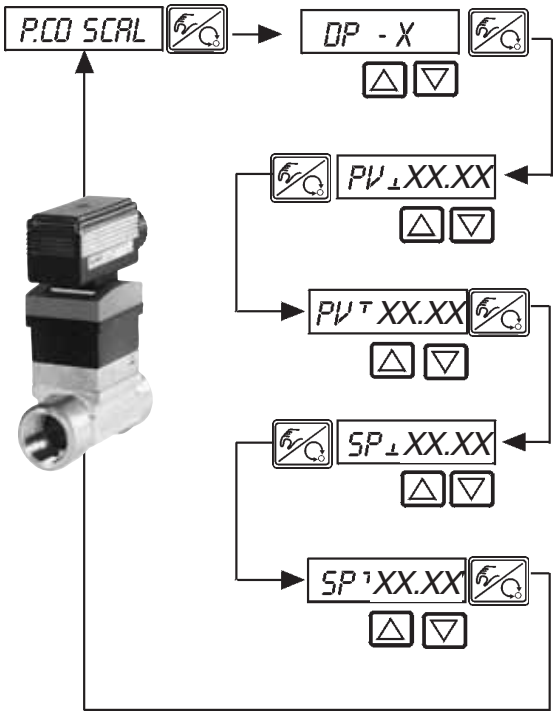

Position of the decimal point for process actual value and setpoint (Setting range: 0..3)

Lower scaling value for process actual value (process value); the value is assigned to 4 mA. **(*)**

Upper scaling value for process actual value (process value); the value is assigned to 20 mA. **(*)**

Lower scaling value for process setpoint; the value is assigned to the smallest current or voltage value of the standard signal. **(**)**

Upper scaling value for process setpoint; the value is assigned to the largest current or voltage value of the standard signal.**(**)**

(*) This setting determines the reference span for the dead-band of the process controller and the analog feedback of the process actual value (option).

(**) This setting is only active when *P.CO SETP / SETP EXT* is selected.

MAN 1000010084 EN Version: K Status: RL (released | freigegeben) printed: 23.04.2009

Example of scaling for 4 ... 20 mA input:

Process actual value from transmitter : 4 ... 20 mA corresponds 0 ... 10 l/min

Process setpoint from SPS: 4 ... 20 mA corresponds 0 ... 8 l/min

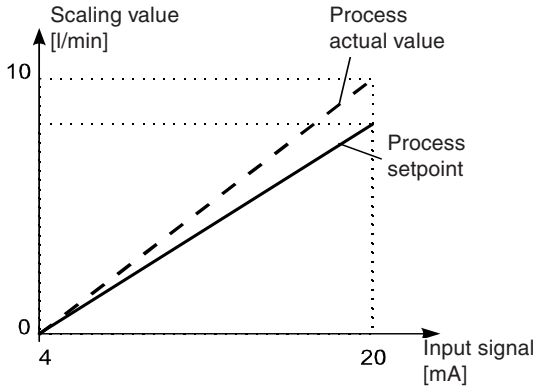

Example for entering scaling values

	Variant 1	Variant 2	Variant 3
PV⊥	0	0	0
PV⊤	1.0	10.0	100.0
SP⊥	0	0	0
SP⊤	0.8	8.0	80.0

NOTE

On entering small scaling values, decimal places are automatically added to increase the precision of display, such that the maximum possible digit range is given between the lower and upper scaling values in each case. The amplification factor KP of the process controller refers to the scaling values set.

With *P.CO SETP / SETP INT* (setpoint entry via the arrow keys), scaling of the setpoint via SP⊥ and SP⊤ is not possible. The setpoint may be entered directly corresponding to the scaled process variable (PV⊥ , PV⊤).

MAN 1000010084 EN Version: K Status: RL (released | freigegeben) printed: 23.04.2009

P.CO SCAL
Scaling the process controller on selection of the frequency input *(P.CO INP FREQ)*

NOTE On entry into this menu the valve is closed in order to have a well-defined starting conditions for execution of the teach-in function.

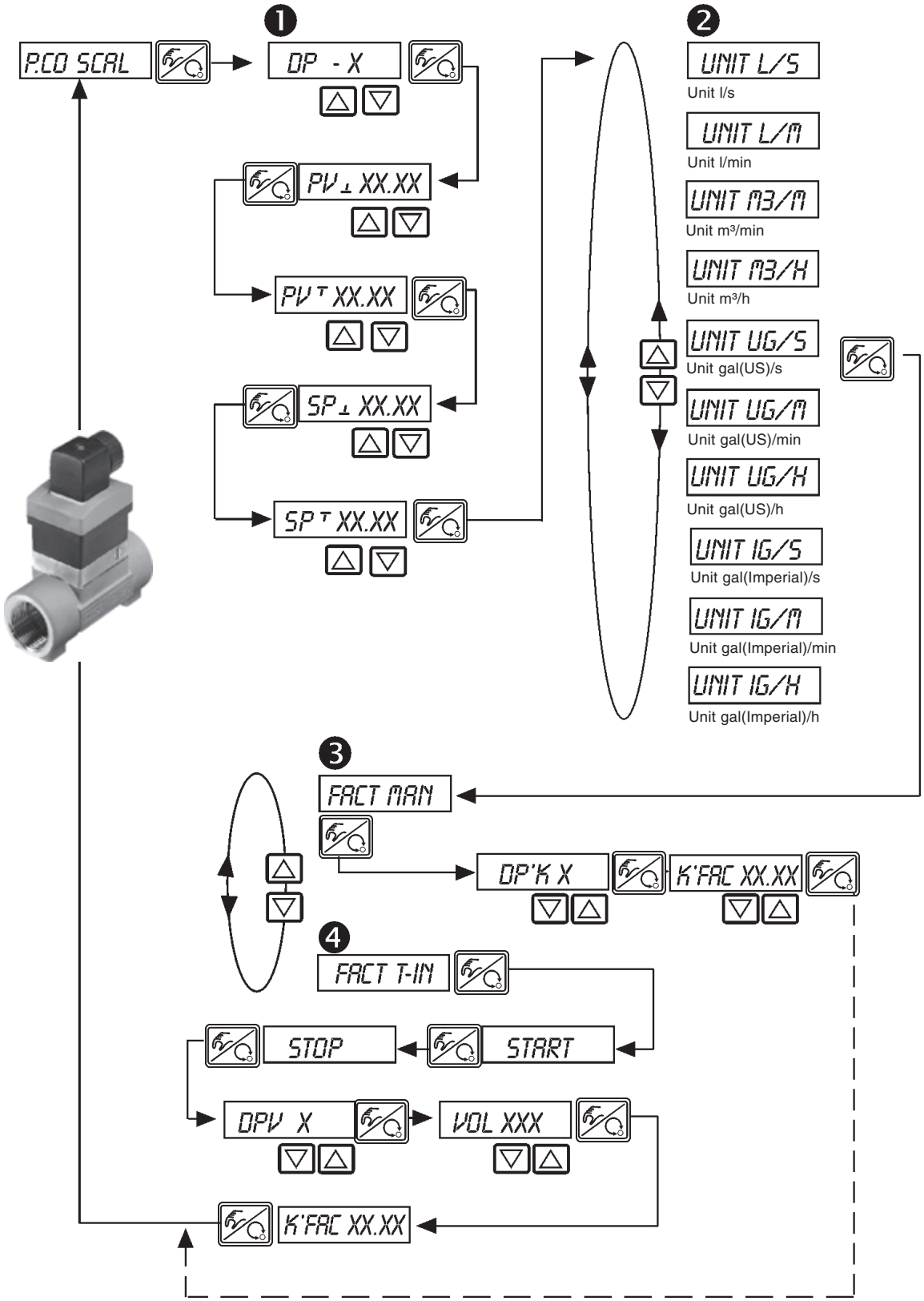

❶ DP - X

Position of the decimal point for process actual value and setpoint
(Setting range: 0 ... 3).

PV⊥ XX.XX

Lower scaling value for process actual value;

the value is entered in the unit that subsequently selected for the flow rate. This setting determines the reference span for the dead-band of the process controller and the analog feedback of the process actual value (option).

PV⊤ XX.XX

Upper scaling value for process actual value;

the value is entered in the unit that is subsequently selected for the flow rate. This setting determines the reference span for the dead-band of the process controller and the analog feedback of the process actual value (option).

SP⊥ XX.XX

Lower scaling value for process setpoint;

the value is assigned to the minimum current or voltage value of the standard signal. This setting is active only when *P.CO SETP / SETP EXT* has been selected.

SP⊤ XX.XX

Upper scaling value for process setpoint;

the value is assigned to the maximum current or voltage value of the standard signal. This setting is active only when *P.CO SETP / SETP EXT* has been selected.

❷ UNIT L/S
⋮
UNIT IG/H

Setting the desired unit of the flow rate

❸ FACT MAN

Manual entry of the K factor for the flow rate sensor

(e.g. from the data sheet for the flow rate sensor)

DP'K X

Position of the decimal point for the K factor (setting range: 0 ... 2)

K'FAC XX.XX

K factor (setting range: 0 ... 9999)

MAN 1000010084 EN Version: K Status: RL (released | freigegeben) printed: 23.04.2009

❹ FACT T-IN

Teach-In funktion:

Calibration of the k factor by measurement of a certain quantity of fluid.

START

Start of measurement

- Open the valve. Close the valve when the tank is filled.
- Use the arrow keys for opening and closing the valve. For this the valve must not be fully open.

STOP

End of measurement

DPV X

Position of the decimal point for entry of the volume measured (setting range: 0..3).

VOL XXX

Enter the volume measured (setting range: 0..9999).
Unit as selected before under *UNITXXXX.*

K'FAC XX.XX

Display of the calculated K factor.

MAN 1000010084 EN Version: K Status: RL (released | freigegeben) printed: 23.04.2009

P.CO SCAL
Scaling the process controller on selection of Pt 100 input
(P.CO INP PT100)

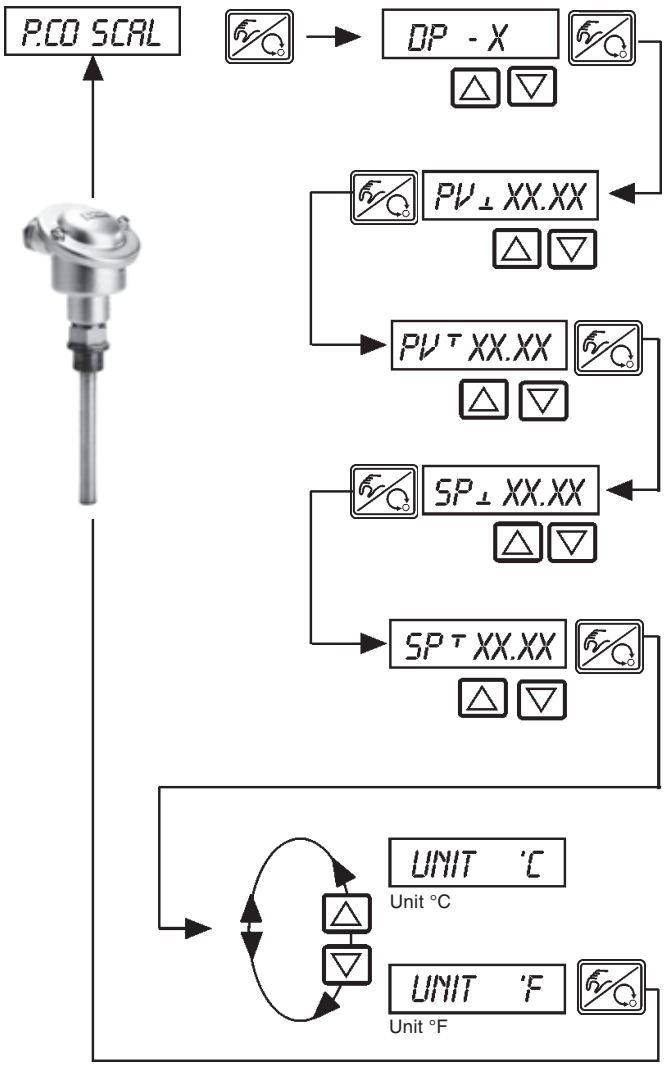

Position of the decimal point
(Setting range: 0... 3)

Lower scaling value for process actual value the value is entered in the unit that is subeequently selected for the flow rate. **(*)**

Upper scaling value for process actual value - the value is entered in the unit that is subsequently selected for the flow rate. **(*)**

Lower scaling value for external process setpoint - the value is assigned to the minimum current or voltage value of the standard signal. **(**)**

Upper scaling value for process setpoint - the value is assigned to the maximum current or voltage value of the standard signal. **(**)**

Setting the desired unit of temperature

(*) This setting determines the reference span for the dead-band of the process controller and the analog feedback of the process actual value (option).

(**) This setting is only active when *P.CO SETP / SETP EXT* is selected.

MAN 1000010084 EN Version: K Status: RL (released | freigegeben) printed: 23.04.2009

P.CO SCAL
Scaling the process controller on selection of the p_1/p_2 input *(P.CO INP P1'P2)*

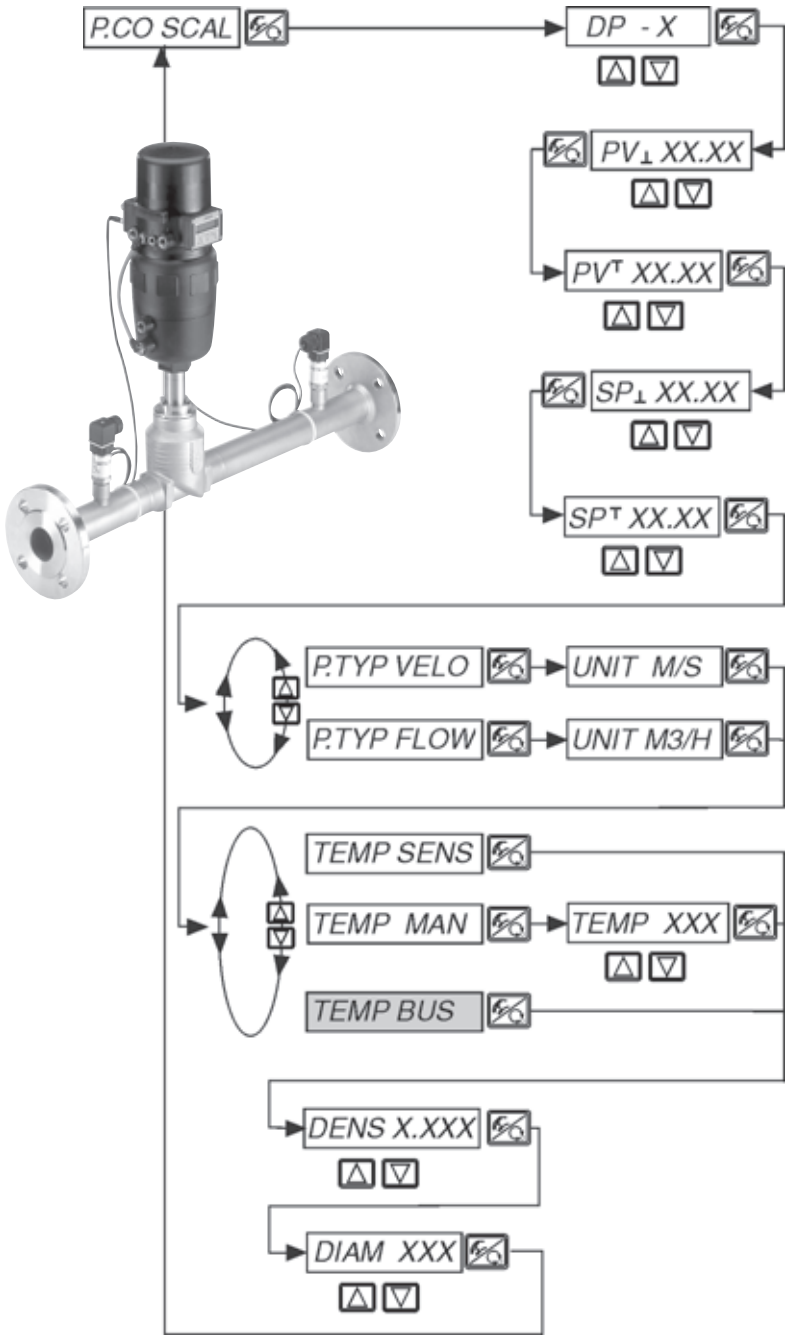

Position of the decimal point
(Setting range: 0 ... 3)

Lower scaling value for process value - The value is entered in the unit that is subsequently selected for the flow rate. **(*)**

Upper scaling value for process value - The value is entered in the unit that is subsequently selected for the flow rate. **(*)**

Lower scaling value for external process setpoint - The value is assigned to the minimum current or voltage value of the standard signal. **(**)**

Upper scaling value for process setpoint - The value is assigned to the maximum current or voltage value of the standard signal. **(**)**

Display of the flow rate - As a transport velocity in m/s
(e.g. with bulk goods) or as a volumetric flow rate in m^3_N/h

Temperature of the medium – Activate the temperature transmitter (optional) or enter the temperature value.

Temperature default value from the Master as process data output (for PROFIBUS DP or DeviceNet).

Medium density (kg/m³) under standard conditions

Diameter of piping in the pumping section (mm)
A dialog appears only when transport velocity *(Velocity)* has been selected as a process parameter.

(*) This setting specifies the reference range for the deadband of the process controller and for the analog display of the process value (option).

(**) This setting is active only when *P.CO SETP/SETP EXT* has been selected.

MAN 1000010084 EN Version: K Status: RL (released | freigegeben) printed: 23.04.2009

P.CO TUNE
Activating the self-optimization of the process controller (process tune)

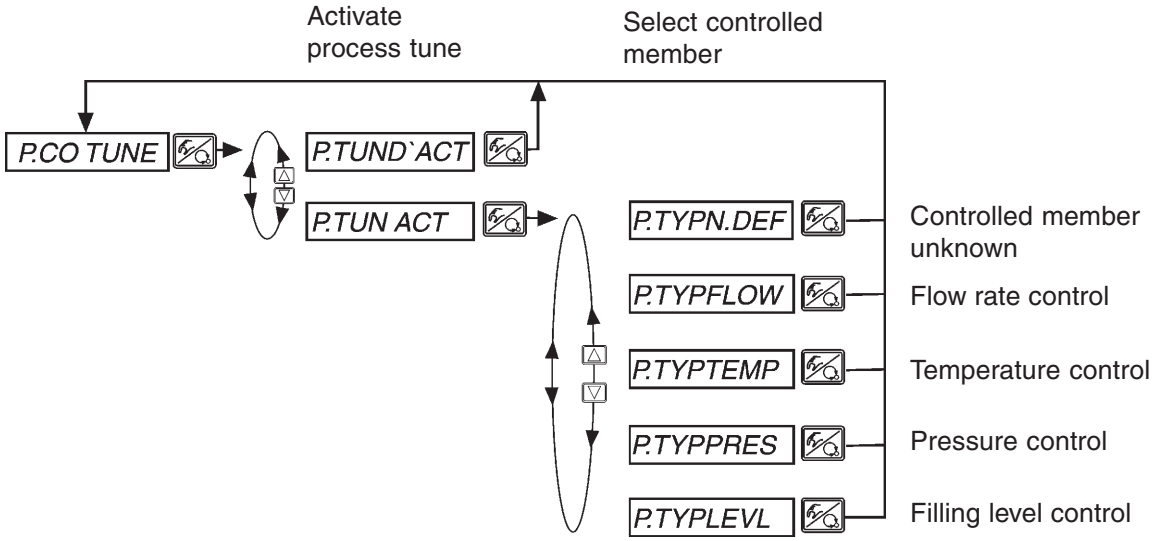

NOTE Process tune is started in the operating mode AUTOMATIC.

P.CO KV
Display or enter kv characteristic curve of the process valve (option flow rate controller)

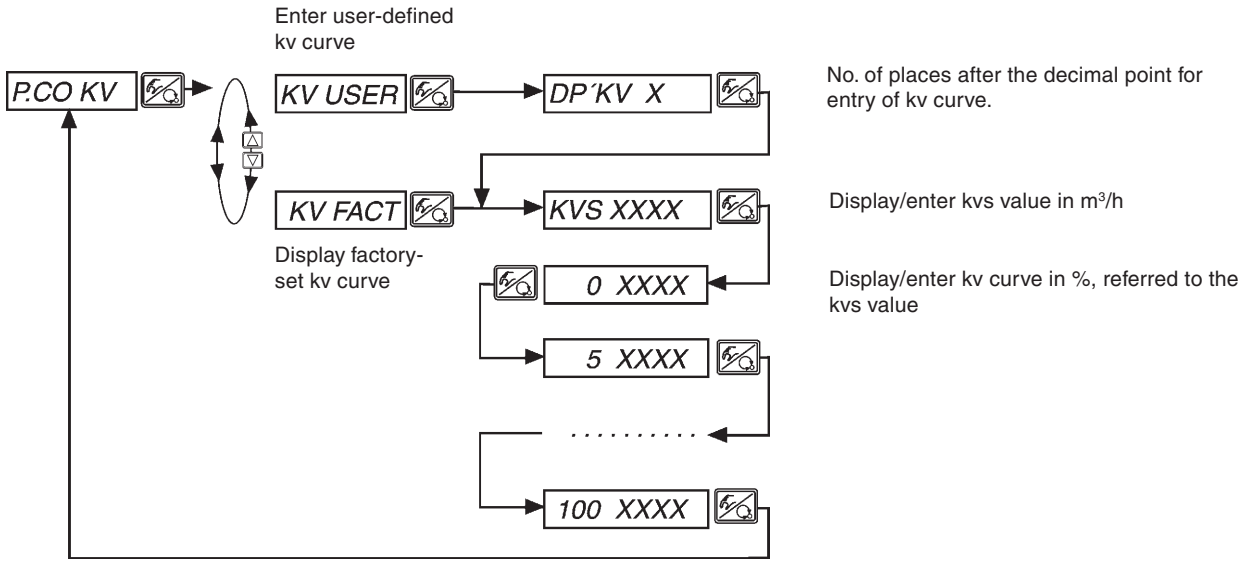

MAN 1000010084 EN Version: K Status: RL (released | freigegeben) printed: 23.04.2009

P.CO LEAK
Reading-in of the leakage characteristic (Flow rate control option)

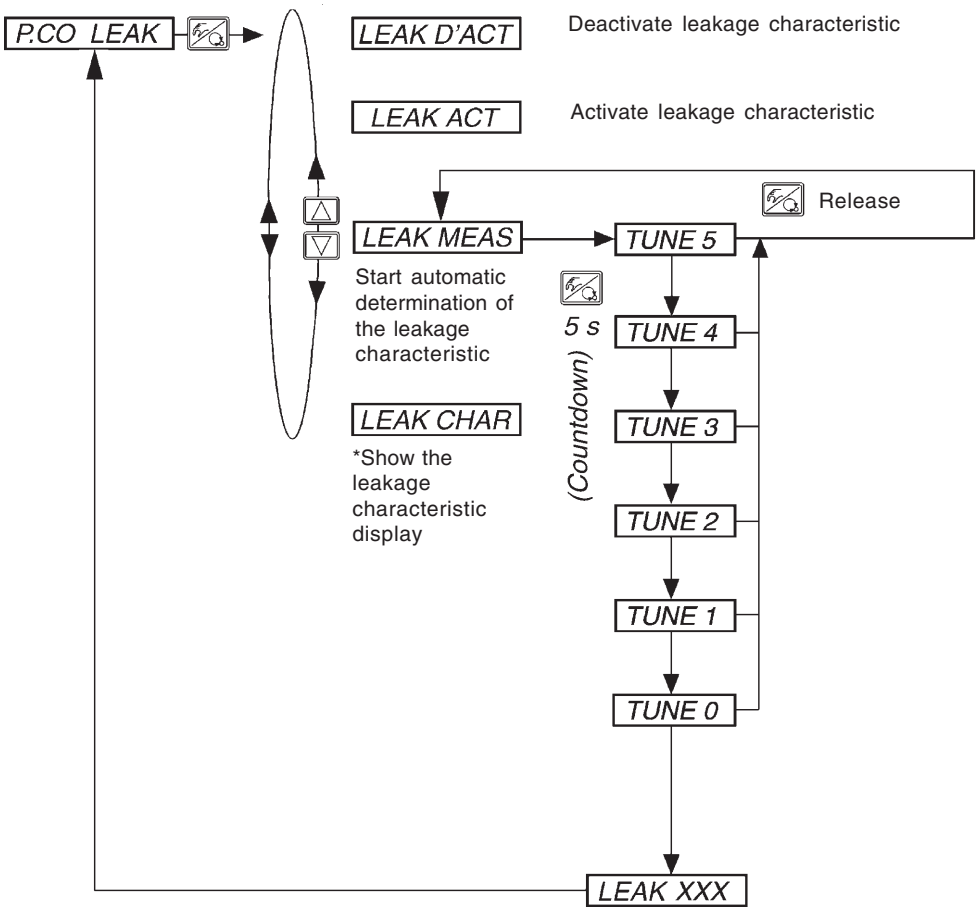

Reference points are displayed alternately as conveyance pressure in mbar and air flow or conveyance speed in m^3/h or m/s respectively.

NOTE To interrupt the leakage determination, press both arrow buttons simultaneously and select LEAK BRK.

MAN 1000010084 EN Version: K Status: RL (released | freigegeben) printed: 23.04.2009

P.Q'LIN

Starting the routine for linearization of the process curve

D

This function makes sense only when flow control is to be carried out.

➔ You start the routine for linearization of the process characteristic by calling up the menu item *P.Q'LIN* in the main menu and pressing the MANUAL/AUTOMATIC key for 5 seconds.

NOTE The function *P.Q'LIN* can only be started when the menu item *P.CONTRL / P.COINP / INP FREQ* or item *P.CONTRL / P.COINP / INP420* has been selected.

With the activation of the function *P.CONTRL*, the functions *P.Q'LIN*, which are required for process control, are copied into the main menu. Via these functions, the program is started for autonomous determination of the fixed points for a correction characteristic.

The program increases in 20 steps the valve stroke from 0 to 100 % and measures the associated process variables. The pairs of values of the correction characteristic are stored as a freely programmable characteristic under the menu item *CHARACT/CHAFREE* and may be viewed under this menu item.

If the menu item *CHARACT* was not transferred under the menu item *ADDFUNCT* to the main menu, this is done automatically on execution of the function *P.Q'LIN*. At the same time, the menu item *CHARACT/CHAFREE* is activated.

Display during call-up and execution of the routine

Display	Description
P.Q'LIN 5 *P.Q'LIN 4* : *P.Q'LIN 0*	Countdown from 5 to 0 for starting der Routine
¦ *P.Q'LIN 0* ¦ *P.Q'LIN 1* ¦ *P.Q'LIN 2* ¦ *P.Q'LIN 3* : *P.Q'LIN.END*	Display of the fixed point that is being approached at the moment (der Fortgang wird durch einen sich drehenden Balken am linken Rand des Displays angezeigt) (flashing) End of routine
Q.ERR X.X	Message on occurrence of an error (shown on the right is the error number - see chapter *Maintenance process controller*)

MAN 1000010084 EN Version: K Status: RL (released | freigegeben) printed: 23.04.2009

P.CO TUNE

Self-optimization of the process controller (process tune)

E

The control system TOP Control Continuous is equipped with a positioner which if required can be supplemented by a superimposed process controller (see chapter: *Operation as a Process Controller*).

The positioner controls the position of the process valve to the desired setpoint and is automatically parametrized and optimized by the *X.TUNE* function.

The superimposed process controller, which together with a sensor forms a process control loop, can control any process parameter. It has a PID structure whose components may be combined in various ways (P, PI, PD, PID), and freely parametrized (KP, TN, TV).

In order to obtain good control behaviour, the structure of the controller must be adapted to the characteristics of the process (controlled member). The parameters must be chosen to obtain a short setting time, a small overshoot width and good damping.

Parametrization demands experience in control tecnique, measuring equipment and is time consuming. For this reason, TOP Control Continuous has a self-optimization function *P.TUNE*. This function provides an unique, direct determination of the parameters. The results may be read out as needed and modified in any way desired.

METHOD OF OPERATION

During commissioning of the control system, the process is excited by a step in the setpoint in a closed control loop. This step is carried out within the future working range of the process control system and serves to determine characteristic variables of the process. Calculation of the PID controller parameters is carried out on the basis of these characteristic variables by use of a modified Ziegler-Nichols procedure.

SETPOINT MODULATOR

In addition to optimization of the PID parameters, a setpoint modulator (filter) is calculated for the reduction of unwanted non-linear effects. Such effects may arise because of physical limitation of the correcting variables and the floating time of the control valve.

The setpoint modulator further improves the control behaviour. It is activated as long as the *P.TUNE* function is activated in the operating menu of the TOP*Control* Continuous (***P.TUN ACT***). When the function *P.TUNE* is deactivated in the operating menu (***P.TUN D'ACT***) after completion of self-optimization, the process is controlled with the optimized PID parameters and the setpoint modulator is deactivated.

ATTENTION! Be sure to comply with the sequence A ... E on setting up the process control system!

MAN 1000010084 EN Version: K Status: RL (released | freigegeben) printed: 23.04.2009

Operation

To carry out self-optimization (process tune) on the process controller, proceed as follows with the **steps** ① **...** ④ described.

NOTE All operating steps for the execution of process tune are performed on the spot using the operating elements (keypad and display) of the TOP Control Continuous.

Step ① - Activate process tune

You are in the menu item *P.CONTROL* in the **configuration level** of the TOP*Control* Continuous. Activate process tune on the process controller *P.TUN ACT* and select the process type corresponding to your control job.

If the process is unknown, enter *P.TYP N.DEF* (not defined).

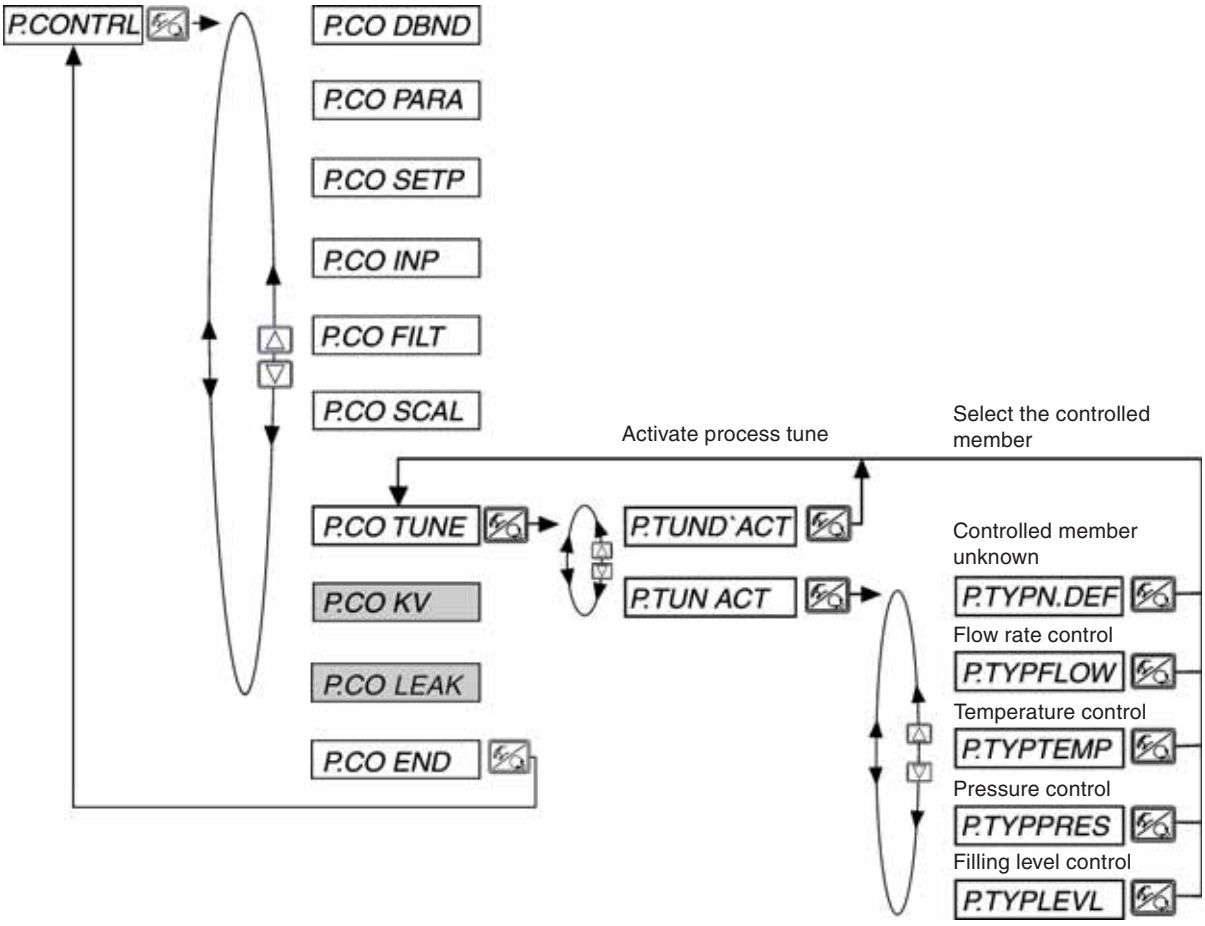

Change to the ***process operation level*** by leaving the configuration level via the menu item *END X.XX* and switching the device to the operating mode *AUTOMATIC* (yellow LED in the MANUAL/AUTOMATIC key flashes).

MAN 1000010084 EN Version: K Status: RL (released | freigegeben) printed: 23.04.2009

Step ② - Process tune ready to start

You are in the **process operating level** in the *AUTOMATIC* mode (yellow LED in the MANUAL/ AUTOMATIC key flashes).

Make ready process tune by the following operating procedure:

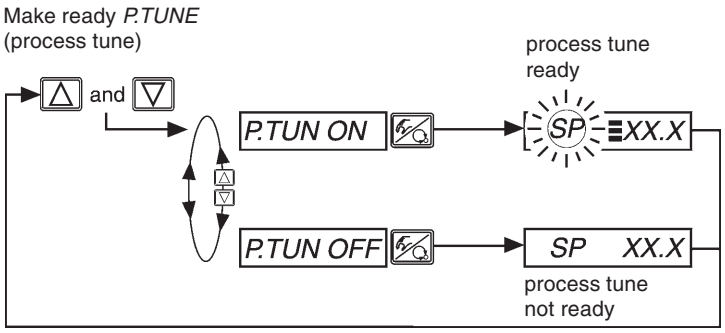

The next setpoint step entered via the keypad (see Step ④) is now used for parameter optimization. The setpoint *SP* is set equal to the actual sensor value *PV* and is the starting value for the optimization step.

Adaptation/modification of this starting value is described in Step ③.

Readiness of process tune is symbolized int he display by three horizontal bars behind the flashing setpoint symbol *SP*.

Step ③ - Adaptation of the starting value for the optimization step (optional)

If required you can carry out an adaptation of the starting value for the optimization step. Switch the device to the *MANUAL* mode (LED in the MANUAL/AUTOMATIC key is off). By pressing the arrow keys, open or close the process valve, which causes a corresponding change in the process value *PV*. As soon as the desired starting value is set, switch the device back to the *AUTOMATIC* mode.

Step ④ - Initiate process tune

You are in the **process operating level** in the AUTOMATIC mode (yellow LED in the MANUAL/ AUTOMATIC key flashes).

Process tune is now initiated by entering via the keypad a setpoint step. This step should take place in the future working range of the process control system.

The procedure is as follows:

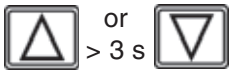

With the display *SP* (setpoint) set, press one of the arrow keys for longer than 3 seconds to activate the mode for changing the process setpoint. After release of the key, the first digit of the process setpoint flashes.

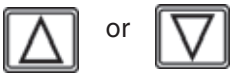

Set the value of the flashing digit of the process setpoint *SP*.

Confirm the value set and move to the next digit. After confirmation of the fourth digit, the process setpoint set is stored as the end value of the process setpoint step.

MAN 1000010084 EN Version: K Status: RL (released | freigegeben) printed: 23.04.2009

NOTE The setpoint step for parameter optimization must always be entered via the operating keypad. This also applies when, on configuration, the function *P.CONTRL / P.CO SETP / SETP EXT* (setpoint setting via analog input) is specified. In this case, the external setpoint setting is reactivated only after completion of process tune.

Self-optimization of the process controller now runs automatically. The display shows a rotating bar and the message *P.TUNE*. After completion of process tune, the device is in the *AUTO* mode. The process controller works from this point on with the optimized PID parameters and controls to the current, internal or external setpoint *SP*.
To execute a new optimization cycle, repeat **Steps** ② **...** ④.

NOTE The Process Tune in the conrol menu of the TOP Control Continuous remains active, so that the process control takes place with the Set-value-Modulation (Filer) for the reduction of unwanted, non-linear effects. If the control will be carried out without the Set-value-Modulator, the process tune in the control menu must be deactivated: *P.CONTRL* / *P.CO TUNE* / *P. TUN* ***D´ACT***

To stop the self-optimization, press both arrow keys at the same time and select *P.TUN BRK*.

MAN 1000010084 EN Version: K Status: RL (released | freigegeben) printed: 23.04.2009

P.CO LEAK Leakage characteristic for flow rate control (Flow rate control option)

The program function *P.CO LEAK* enables air leakage compensation, which increases the accuracy of the flow rate control.

Background: during transport of pourable solids, there arises at a cellular wheel sliuce an air leakage dependent on the pressure. The air flow through the controller unit is the sum of this leakage and the air flow of the conveying pipe.

$$QFMR = Q_{air\ leak} + Q_{conv.\ pipe}$$

To achieve an air leakage compensation, an air leakage characteristic must be read-in once with the conveying pipe closed.

Reading-in of the leakage characteristic

Boundary conditions

For exact measurement of the leakage, the system should be started up in the normal mode. However, the following exceptions apply:

- The conveying pipe must be closed off behind the components causing the leak.
- The material to be transported is omitted.

ATTENTION!

- In the case of pneumatic conveying of pourable solids with a rotary valve, the following must be observed:
- The conveying pipe must be closed off behind the rotary valve.
- The rotary valve must be empty and run at the nominal rpm..
- Measures for sealing the system (e. g. blocking air that enters from above into the rotary valve) must be connected.
- The compressor must be switched on.

Measurement and reading-in of the leakage characteristic

→ Select program to initiate automatic recording of leakage characteristic using *P.CONTRL* → *P.CO LEAK* → *P.CO MEAS* menu

→ Press and hold the button for 5 seconds.

The leakage characteristic is now automatically captured and read-in.

Display	Description
TUNE 5 *TUNE 4* : *TUNE 0*	Countdown from 5 to 0 to the start of leakage determination
LEAK IN *LEAK PO* *LEAK OPN* *LEAK PAR*	Display of the momentarily running phase of leakage determination (progress is indicated by a rotating beam at the left hand edge of the display)
LEAK END	Display flashes. Leakage determination successfully completed
L.ERR X	Display on occurrence of an error (display on the right: error number, see chapter Maintenance and Troubleshooting in the controller manual)

NOTE

Press both buttons simultaneously to interrupt the determination of the characteristic and select *LEAK BRK*.

MAN 1000010084 EN Version: K Status: RL (released | freigegeben) printed: 23.04.2009

Program sequence

- The control valve is closed.
- After 10 sec settling time, the admission pressure at the controller unit (FMR) is registered.

NOTE

Scaling of the x-axis of the leakage characteristic is based upon this pressure value. The upper limit is this value times a factor of 0.85
Up to 21 reference points are determined.

Example: at an admission pressure of 2.0 bar, the characteristic curve is obtained from 0 to 1.7 bar in 85 mbar steps.

- The control valve is slowly opened in a ramp time of 60 sec.
- Parallel to this, the conveyance pressure (pressure at the outlet side of the FMR) is monitored.
  For each reference point of the characteristic, the conveyance pressure and the air flow are registered.
- Reading in is complete when after 60 sec the contol valve is fully open, or the conveyance pressure previously reaches the uper limit of the scaling.
- Air leakage compensation is now activated. The process value is now obtained from the difference between the measured air flow and the air leak rate calculated from the characteristic:

$$Q_{conv.\ pipe} = Q_{FMR} - Q_{air\ leak}$$

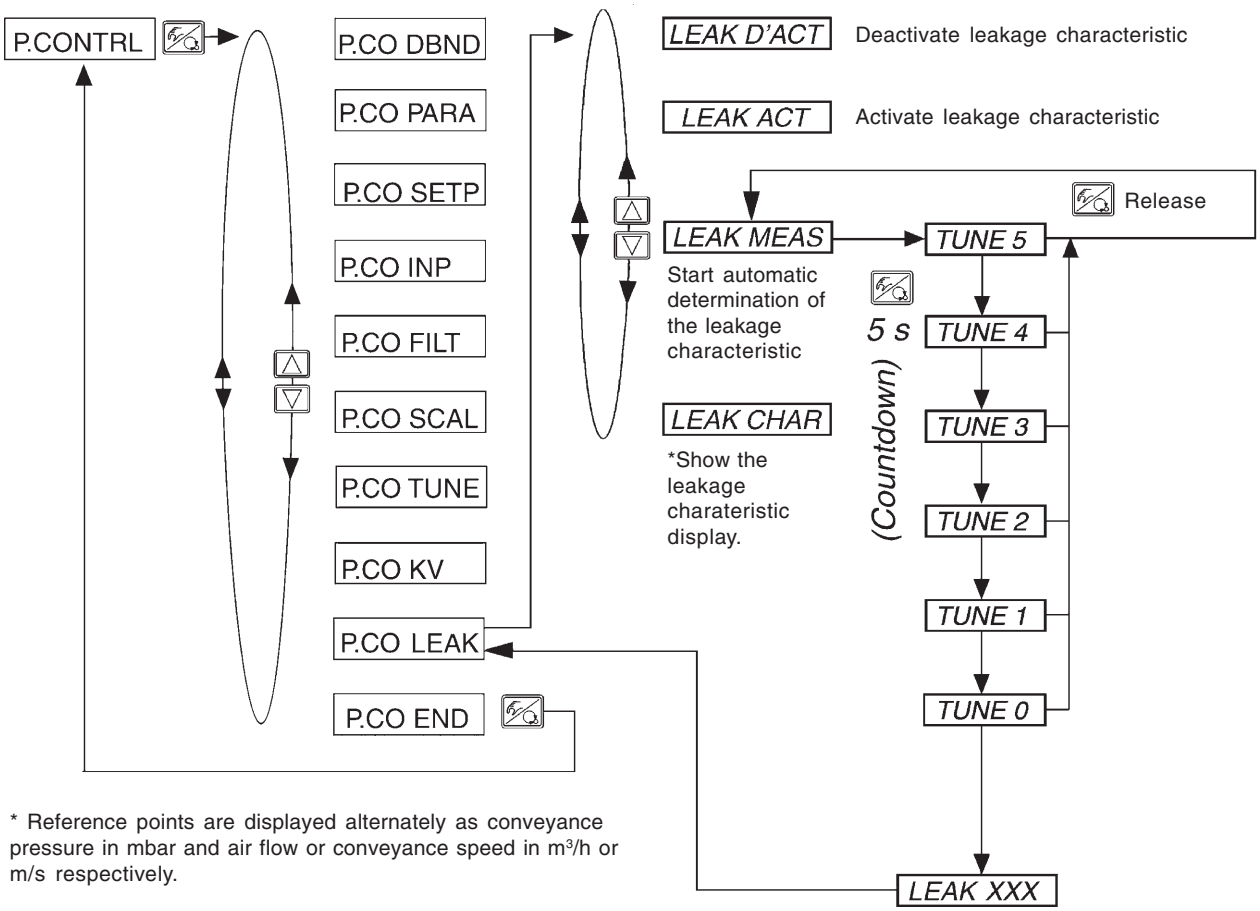

* Reference points are displayed alternately as conveyance pressure in mbar and air flow or conveyance speed in m³/h or m/s respectively.

Deactivation of the characteristic curve

The leakage characteristic that has been read-in can be deactivated using the function *LEAK D'ACT* in the *P.CO LEAK* menu.

MAN 1000010084 EN Version: K Status: RL (released | freigegeben) printed: 23.04.2009

Operating the process

Each time after switching on the voltage supply, the TOP Control Continuous is automatically in the process operating level. To change to the process operating level from the configuration level, confirm the menu item *END* by pressing the MANUAL/AUTOMATIC key.

In the process operating level, normal controlled operation is executed and monitored (in the AUTOMATIC mode), and the valve opened or closed by hand (MANUAL mode).

Switching between the operating modes

Operate the MANUAL/AUTOMATIC key to switch between the MANUAL and AUTOMATIC modes.

5 sec

Both in the MANUAL and the AUTOMATIC modes, you can change to the configuration level by pressing the MANUAL/AUTOMATIC key for longer than 5 seconds. On switching back to the process operating level, the operating mode is resumed that was set before switching over.

Operating mode	Yellow LED in the MANUAL/AUTOMATIC key	Display
AUTOMATIC	flashes	An apostrophe (') runs continuously from left to right.
MANUAL	off	-

Operating mode AUTOMATIC

In the AUTOMATIC mode, normal controlled operation is executed and monitored.

Meaning of the keys

△ or ▽	Switch over the display
△ or ▽ > 3 sec	Change the process setpoint With configured supplementary functions *P.CONTRL/P.CO SETP/SETP INT* and *SP* display set.
△ and ▽	Make *P.TUNE* (process tune) ready for start. With *PID* self-optimization activated, *P.CONTRL/P.CO TUNE/ P.TUN ACT*

Displays

With the process controller activated, the following parameters can be displayed:

- Actual value of process variable (process value) — *PV_____* (- 999 ... 9999)
- Setpoint of process variable (process setpoint) — *SP_____* (- 999 ... 9999)
- Setpoint position of valve actuator after rescaling through optionally activated split-range function or correction curve — *CMD __XXX* (0 ...100 %)
- Temperature inside housing of the TOP Control Continuous — *TEMP__XX.X* (in °C)

By pressing the arrow keys, you can switch between these display options.

Operating structure and procedures

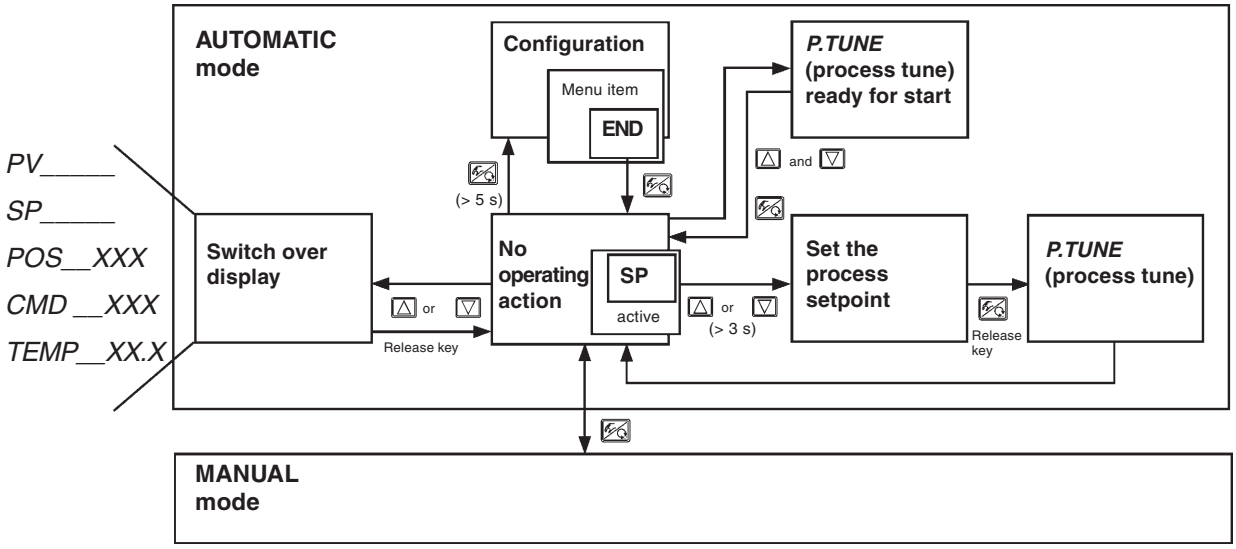

NOTE

If the device is in the safety position (for the relevant configuration, see menu item *BIN-IN* or *SIG-ERR), SAFE XXX* appears in the display.
If the menu item *CUTOFF* is activated and the process vave is in the tight-closing range, a flashing *MIN* or *MAX* symbol appears in the display.
If the process value (*PV*) is above or below the measurement range, a flashing bar appears in the display.

MAN 1000010084 EN Version: K Status: RL (released | freigegeben) printed: 23.04.2009

Manually changing the process setpoint

△ or > 3 sec ▽

If the supplementary function *P.CONTRL / P.CO SETP / SETP INT* (setting of the setpoint via keys) was specified on configuration, then with the display *SP* set (setpoint) and on pressing one of the arrow keys for longer than 3 seconds, the mode for changing the process setpoint can be activated. After release of the key, the first digit of the process setpoint flashes.

△ or ▽

The first digit of the process setpoint can be set.

After confirmation with the MANUAL/AUTOMATIC key, the set value is stored.

In the same manner, the other digits are set. After confirmation of the last digit, the display returns to the previous mode.

Operating mode MANUAL

(yellow LED off)
In the manual mode, the valve can be opened and closed by hand.

Meaning of the keys in the MANUAL mode:

△

Press the △ key in the MANUAL mode:
Pressurization of the actuator
SFA: valve opens
SFB: valve closes
SFI: port 2.1 pressurized

▽

Press the ▽ key in the MANUAL mode:
Venting of the actuator
SFA: valve closes
SFB: valve opens
SFI: port 2.2 pressurized

△ + ▽

Hold down the △ key and simultaneously press the ▽:
Fast pressurization

▽ + △

Hold down the ▽ key and simultaneously press the △:
Fast venting

NOTE

SFA: actuator closing by spring force
SFA: actuator opening by spring force
SFI: actuator with double action

MAN 1000010084 EN Version: K Status: RL (released | freigegeben) printed: 23.04.2009

Displays

The last display set in the AUTOMATIC mode is shown.

By selecting *PV_XXX*, the actual value of the process variable can be checked.

To display the actual position of the valve actuator during MANUAL operation, change to the display *POS_XXX* in advance in the AUTOMATIC mode.

Operating structure and procedures

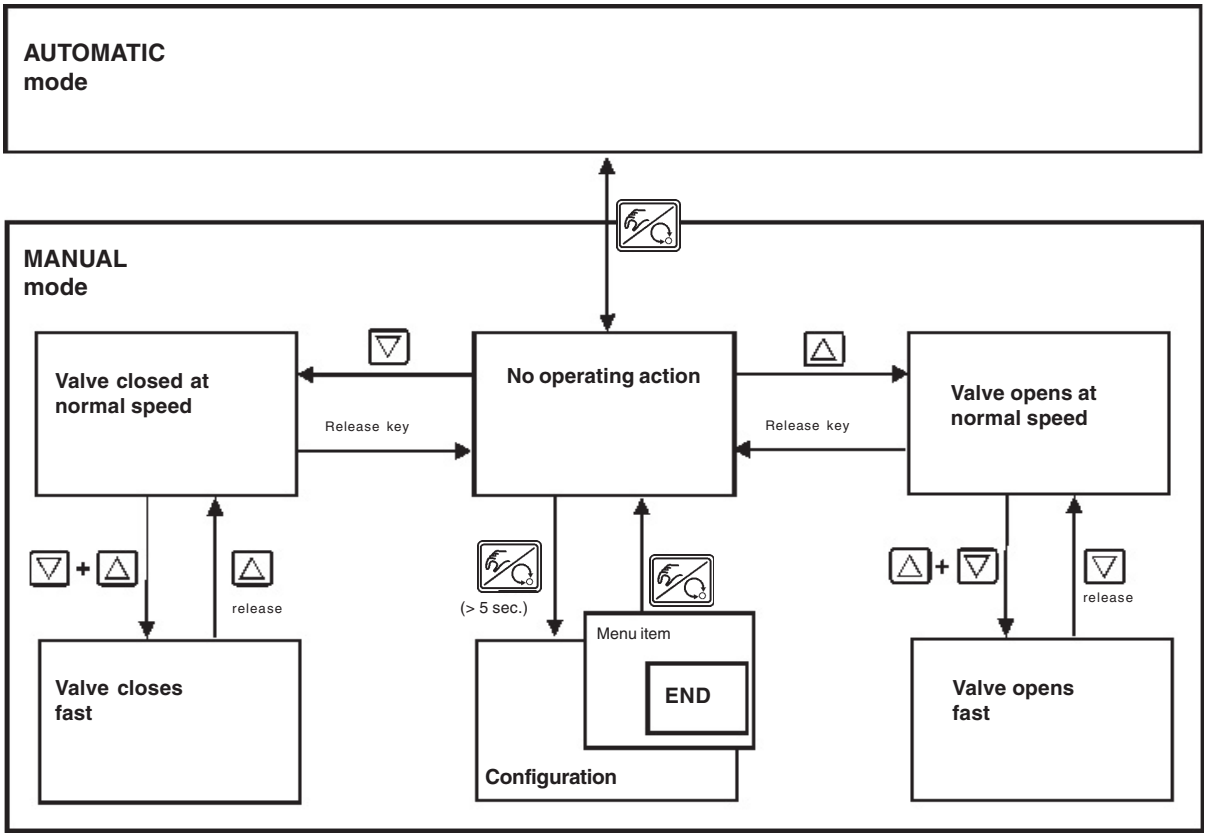

MAN 1000010084 EN Version: K Status: RL (released | freigegeben) printed: 23.04.2009

PROFIBUS DP

MAN 1000010084 EN Version: K Status: RL (released | freigegeben) printed: 23.04.2009

General notes

he following functions are invalid for the TOP Control Continuous with PROFIBUS DP:

- *INPUT*
- *CAL.USER / CAL INP*
- *CAL.USER / CAL OUT*
- *CAL.USER / CAL SP*

Technical data

The protocol sequence corresponds to DIN 19245 Part 3.

GSD file	BUERC630.GSD
Bitmap files	BUEC630.DIB BUEC630N.BMP (for Siemens COM-PROFIBUS) BUEC630D.BMP (for Siemens COM-PROFIBUS)
PNO-ID	C630 Hex
Baud rate	max. 1.5 Mbaud (automatically set by TOP Control Continuous)
Sync and freeze mode	not supported
Diagnosis telegram	no device-specific diagnosis
Parameter telegram	no user parameters

Configuration of the process data is performed in the TOP Control and in the PROFIBUS Master.

A maximum of 10 process values (sum of input and output) can be transferred.

Safety settings on bus failure

The actuator moves to the position corresponding to the setpoint last transmitted (default setting).
For other setting options (see the chapter *Settings on the TOP Control Continuous*)

MAN 1000010084 EN Version: K Status: RL (released | freigegeben) printed: 23.04.2009

Interfaces

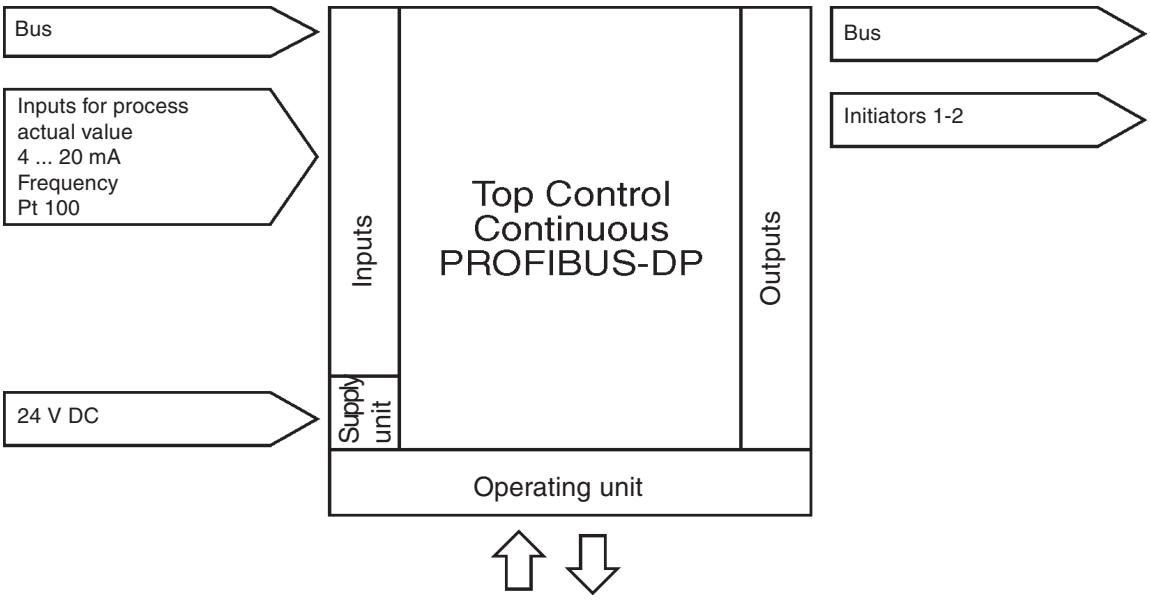

Electrical connections

For operating the device it is imperative to connect the 5-pole, inverse-coded M12 circular socket connector and the 4-pole M12 circular plug connector (voltage supply).

Connection with one plugged bus connector

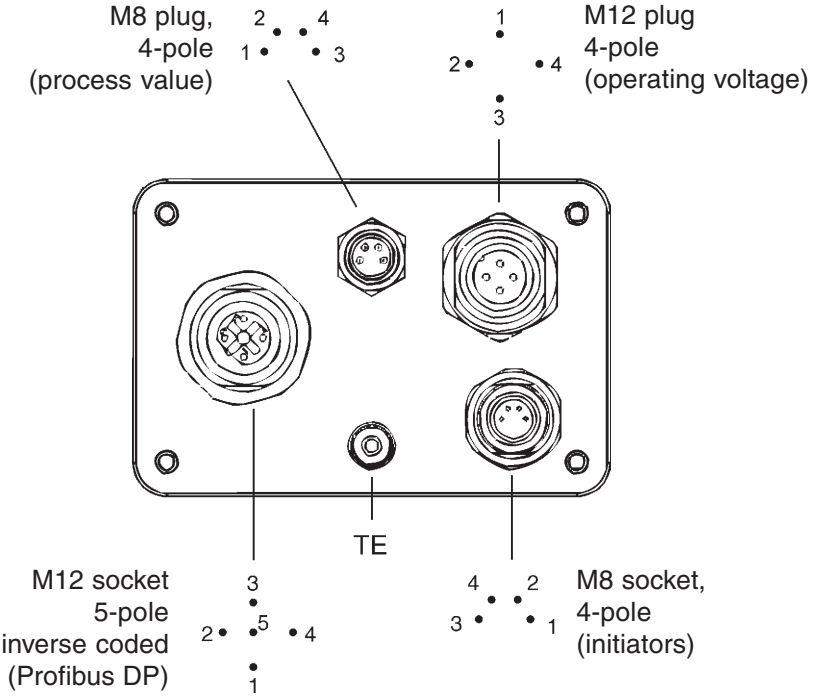

MAN 1000010084 EN Version: K Status: RL (released | freigegeben) printed: 23.04.2009

Connection with 2 plugged bus connectors

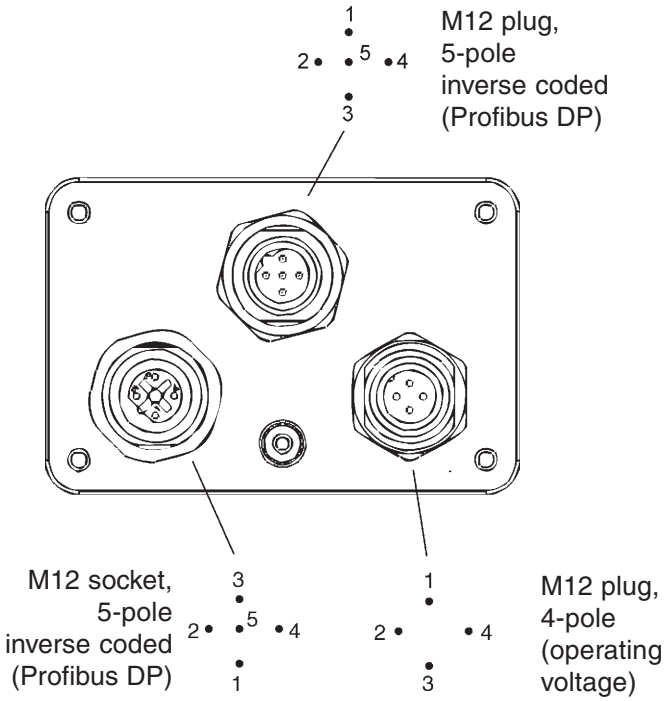

Operating voltage (circular plug M12, 4-pole)

Pin	Allocation	External connection
1	+ 24 V	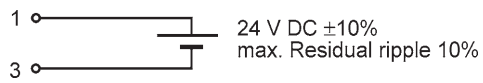
2	not connected	
3	GND	
4	not connected	

Bus connection (circular socket/plug M12, 5-pole)

Pin	Signal	Meaning
1	VP+5	Supply for terminating resistors
2	RxD/TxD-N	Received/transmitted data (minus)
3	DGND	Data transmission potential (mass to 5 V)
4	RxD/TxD-P	Received/transmitted data (plus)
5	Screen	Screen/protective earth (ground)

MAN 1000010084 EN Version: K Status: RL (released | freigegeben) printed: 23.04.2009

Inductive proximity switches (circular socket M 8)

Pin	Allocation	Signal level
1	Proximity switch 1 + (NO)	+24 V DC — S1 — 1 → Open / 24 V
2	Proximity switch 1 GND	GND — 2 → GND
3	Proximity switch 2 + (NO)	+24 V DC — S2 — 3 → Open / 24 V
4	Proximity switch 2 GND	GND — 4 → GND

Process value (circular plug M 8)

Input type *	Pin	Assignment	Jumper**	external circuit
4 ... 20 mA - internally supplied	1 2 3 4	+ 24 V input transmitter output transmitter GND bridge after GND		1, 2, 3, 4 — I → Transmitter
4 ... 20 mA - externally supplied	1 2 3 4	not assigned process actual + not assigned process actual -		2 — +(4..20 mA) 4 — GND
Frequency - internally supplied	1 2 3 4	+ 24 V - sensor supply clock input + clock input - (GND) not assigned		1 — +24 V 2 — clock + 3 — clock -
Frequenz - externally supplied	1 2 3 4	not assigned clock input + clock input - not assigned		2 — clock + 3 — clock -
Pt-100 (see Note below)	1 2 3 4	not assigned process actual 1 (current supply) process actual 3 (GND) process actual 2 (compensation)		2, 3, 4 — Pt 100

* Adjustable via software (see chapter *Procedure for determining the basic settings*)

** The jumper is located on the connector board of the TOP Control Continuous.

NOTE For line compensation reasons, connect sensor Pt-100 via 3 conductors, PIN 3 and PIN 4 must be bridged at the sensor.

MAN 1000010084 EN Version: K Status: RL (released | freigegeben) printed: 23.04.2009

Termination connection for PROFIBUS systems

On installation of a PROFIBUS system, care must be taken to terminate the data lines correctly. The termination generates a well-defined potential state and avoids the occurrence of disturbances by signal reflections on the data lines. For this purpose, the data lines must be terminated at both ends by resistors as shown.

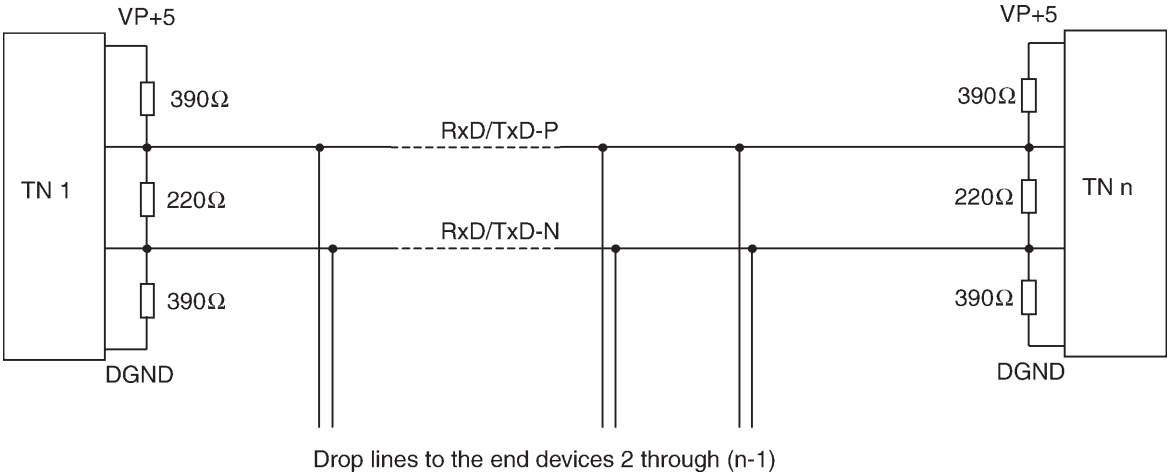

MAN 1000010084 EN Version: K Status: RL (released | freigegeben) printed: 23.04.2009

Settings on the TOP Control Continuous

In deviation from the details in the enclosed operating instructions, the following settings must be made in the main menu of the device:

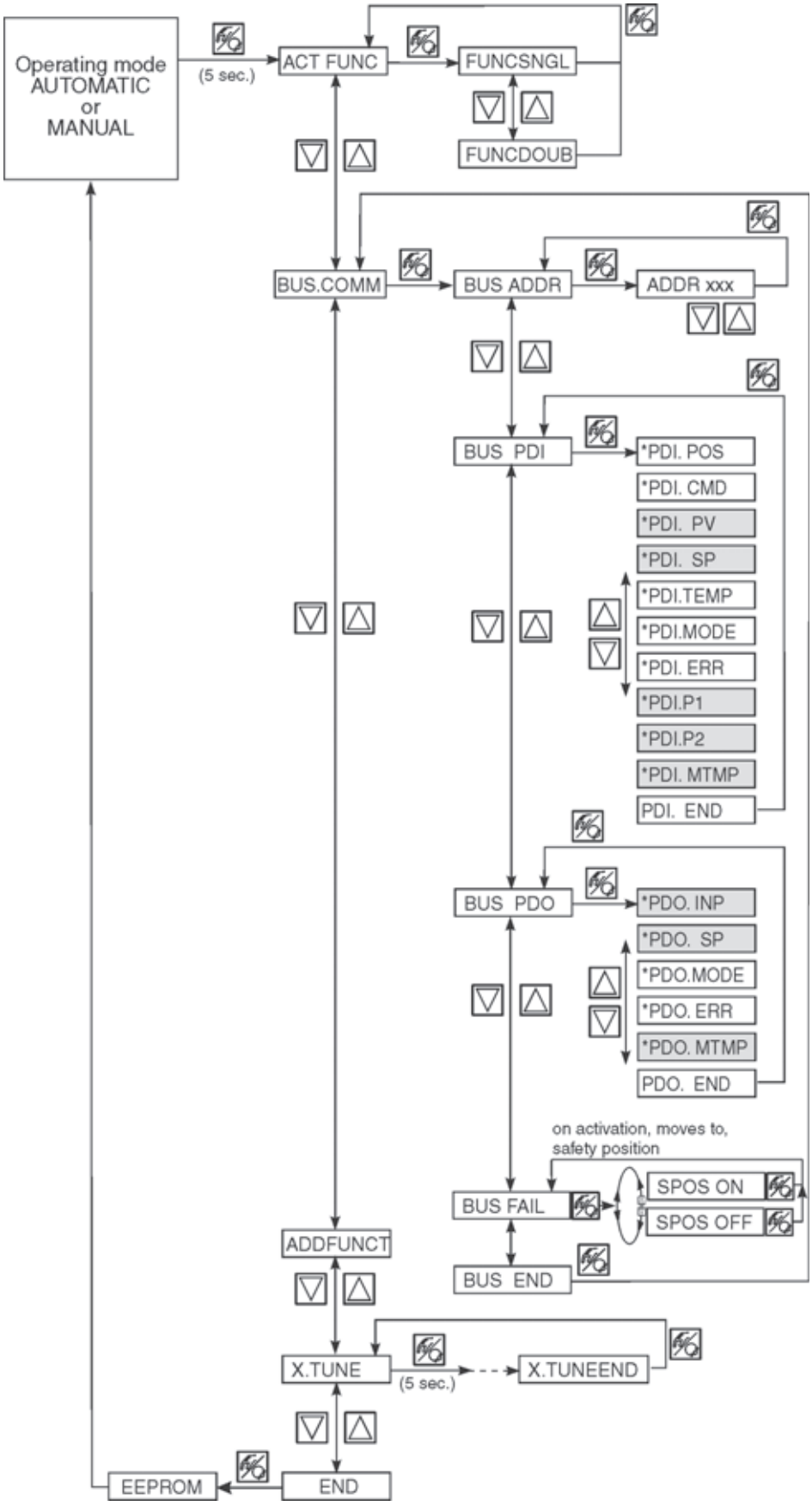

MAN 1000010084 EN Version: K Status: RL (released | freigegeben) printed: 23.04.2009

Explanation of the menu items

BUS ADDR	Entry of the device address (default: 3)
ADDR xxx	Values from 0 to 126 can be set with the arrow keys; confirmation is done with the MANUAL/AUTOMATIC key.
BUS PDI	Selection of the process values that are to be transferred from the TOP Control Continuous to the control (master).
** PDI. POS*	with the MANUAL/AUTOMATIC key, each process value can be either
:	activated (* appears) or deactivated (no *)
** PDI. ERR*	For significance of the process values, see table *PDI: Process Data Input*
BUS PDO	Selection of the process values that are to be transferred from the control (master) to the TOP Control Continuous.
** PDO. INP*	With the MANUAL/AUTOMATIC key, each process value can be either
:	activated (* appears) or deactivated (no *).
** PDO. ERR*	For significance of the process values, see table *PDO: Process Data Output*
BUS FAIL	**Activation for movement to saftey position on bus communication failure**
SPOS OFF	The actuator moves to the position corresponding to the setpoint last transmitted (default setting).
SPOS ON	With *SPOS ON* set, the following configurations can occur: **Activated menu item *SAFEPOS*** On error in bus communication, the actuator moves to the position set under *SAFEPOS*. **Deactivated menu item *SAFEPOS*** On error in bus communication, the actuator moves to the end position it would occupy in the zero voltage condition.

Functional deviations from the standard version

The operating mode can be switched between MANUAL and AUTOMATIC in the process operating level either with the keypad on the TOP Control Continuous or over the bus.

MANUAL/AUTOMATIC switchover on the keypad is no longer possible when an operating mode (under *"PDO MODE"*) is transmitted to the TOP Control Continuous over the bus.

MAN 1000010084 EN Version: K Status: RL (released | freigegeben) printed: 23.04.2009

Configuration in the PROFIBUS DP master

User parameters (hex paramaters) are not required.

Configuration of the process values

First the process data input are entered (from the TOP Control Continuous to the control).

NOTE In the same order as in the selection in the TOP Control Continuous and only process data (*PDI*) activated in the configuration menu may be entered.

PDI: Process Data Input

(from the TOP Control Continuous to the control)

Name	Description	Identifiers
PDI:POS	Actual position (Position) Actual value of positioner in ‰. Range of values 0 ... 1000. Values < 0 or > 1000 are possible when e.g. AUTOTUNE was not run throug properly.	GSD file: *PDI:POS* Identifiers (HEX): 41, 40, 00
PDI:CMD	Setpoint position (Command) Positioner setpoint in ‰. Range of values 0 ... 1000.	GSD file: *PDI:CMD* Identifiers (HEX): 41, 40, 01
PDI:PV	Process actual value (Process Value) Actual value of process controller in physical units (as set in menu *P.CO INP* or *P.CO SCAL*), max. range of values -999 ... 9999, depending on internal scaling	GSD file: *PDI:PV* Identifiers (HEX): 41, 40, 02
PDI:SP	Process setpoint (Setpoint) Setpoint of value of process controller in physical units (as set in menu *P.CO INP* or *P.CO SCAL*), max. range of values -999 ... 9999, depending on internal scaling	GSD file: *PDI:SP* Identifiers (HEX): 41, 40, 03
PDI:TEMP	Device temperature (Temperature) Temperature in 0.1 °C is measured on the CPU board with a sensor, range of values -550 (-55 °C) ... +1250 (+125 °C)	GSD file: *PDI:TEMP* Identifiers (HEX): 41, 40, 04
PDI:MODE	Operation mode (Operation Mode) Operation mode: 0: *AUTO* 10: *P.TUNE* 1: *HAND* 12: *BUSSAFEPOS* 2: *XTUNE* 3: *MENUE* 9: *P.QLIN*	GSD file: *PDI:Mode* Identifiers (HEX): 41, 00, 05
PDI:ERR	Error (Error) States the number of the process value (output) that was not written. The value is retained until deleted with *PD-O:ERR*. HEX 14 *PD-O:CMD* 15 *PD-O:SP* 16 *PD-O:MODE*	GSD file: *PDI:ERR* Identifiers (HEX): 41, 00, 06

MAN 1000010084 EN Version: K Status: RL (released | freigegeben) printed: 23.04.2009

PDI: Process Data Input (continued)

(from the TOP Control Continuous to the controller)

Name	Description	Identifiers
PDI:P1	Forward pressure p1 Pressure in mbar (rel) that is present in front of the process valve. The value will be determined using a pressure transmitter. Value range -1013 ... +16000	GSD file: *PDI:P1* Identifiers (HEX): 41, 40, 07
PDI:P2	Back pressure p2 Pressure in mbar (rel) that is present behind the process valve. The value will be determined using a pressure transmitter. Value range -1013 ... +16000	GSD file: *PDI:P2* Identifiers (HEX): 41, 40, 08
PDI:MTMP	Medium temperature Temperature of the medium in °C. The value will be predefined from the menu, the bus, or using a temperature transmitter. Value range -20 ... +150	GSD file: *PDI:MTMP* Identifiers (HEX): 41, 40, 09

NOTE *PDI. PV* and *PDI. SP* can only be selected if the process controller has been activated.
PDI.P1/P2/MTMP can only be selected if the fluid flow controller option is active.

Finally, the process data output (from the controller to the TOP Control Continuous) is entered.

NOTE In the same order as in the selection in the TOP Control Continuous and only process data (*PDI*) activated in the configuration menu may be entered.

The updating of the process data output only takes place in the MANUAL and AUTOMATIC modes.

MAN 1000010084 EN Version: K Status: RL (released | freigegeben) printed: 23.04.2009

PDO: Process Data Output

(from the control to TOP Control Continuous)

Name	Description	Identifiers
PDO:INP	Set position (Input) Set-value positioner in ‰, value range 0 ... 1000. In the "pure" positioner operation *(PCONTRL* inanctive), the transmission of the set position *INP* is required, as process controller (*PCONTRL* active), the transmission of *INP* is not possible. If the value is too small or too large, the last valid value will be used and will be displayed in *ERR* with HEX 14.	GSD file: *PDO:INP* Identifiers (HEX): 81, 40, 14
PDO:SP	Process-set-value (Set-point) Set-value process controller in physical unit (as set up in the *P.CO INP* or *P.CO SCAL* menu), max. value range -999 ... 9999, depending on the internal scaling. If the value is too small or too large, the last valid value will be used and will be displayed i*n ERR* with HEX 15.	GSD file: *PDO:SP* Identifiers (HEX): 81, 40, 15
PDO:MODE	Operation Mode Value range 0 (*AUTO*) ... 1 (*MANUAL*) ... 12 (*BUSSAFEPOS*) Operation mode: 0: *AUTO* 12: *BUSSAFEPOS* 1: *HAND* If the value is too small or too large, the last valid value will be used and will be displayed in *ERR* with HEX 16.	GSD file: *PDO:MODE* Identifiers (HEX): 81, 00, 16
PDO:ERR	Reset of error message If the value > 0, *ERR* is reset.	GSD file: *PDO:ERR* Identifiers (HEX): 81, 00, 17
PDO:MTMP	Medium temperature Temperature of the medium in °C. The value will be predefined from the menu, the bus, or using a temperature transmitter. Value range -20 ... +150 If the value is too small or too large, the last valid value will be used and will be displayed in *ERR* with HEX 18.	GSD file: *PDO:MTMP* Identifiers (HEX): 81, 40, 18

NOTE

PDO. INP is always active with the positioner, not present with process conroller.
PDO. SP can only be selected if the process controller is activated.
PDO. MTMP can only be selected if the fluid flow controller option is active.

Bus status display

The bus standard is indicated on the display.

Display message	Device status	Explanation/problem elimination
BUS OFFL alternates with the display value set	offline	Device is no connection to the bus - bus connection incl. plug configuration correct? - voltage supple and bus connection of the other subscribers correct?
4 dots to the left beneath the display value set	online, active connection	Device is engaged in cyclic data exchange

MAN 1000010084 EN Version: K Status: RL (released | freigegeben) printed: 23.04.2009

Example 1 with COM Profibus V3.3

Example for a positioner

Settings in the configuration menu of the TOP Control Continuous:

ADDR: 3	*PDI:*	*PDO:*
	• *PDI:POS*	• *PDO:INP*
	• *PDI:MODE*	• *PDO:MODE*

After starting COM Profibus and the setting of master and SPS information, one gets the following screen:

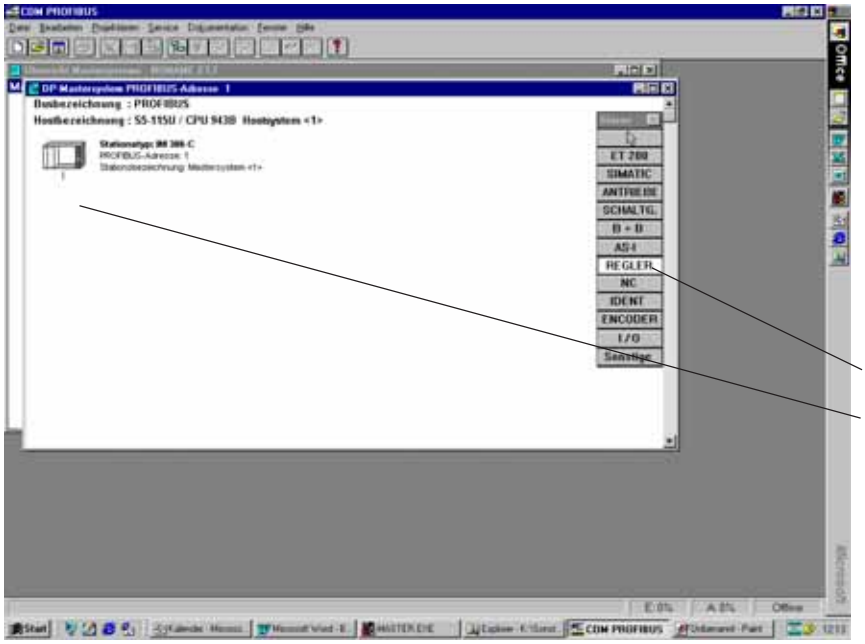

- Select CONTROLLER
- Set an element under the control
- Set the 3rd address in the menu address (without image)
- Confirm with *OK*

The following screen appears:

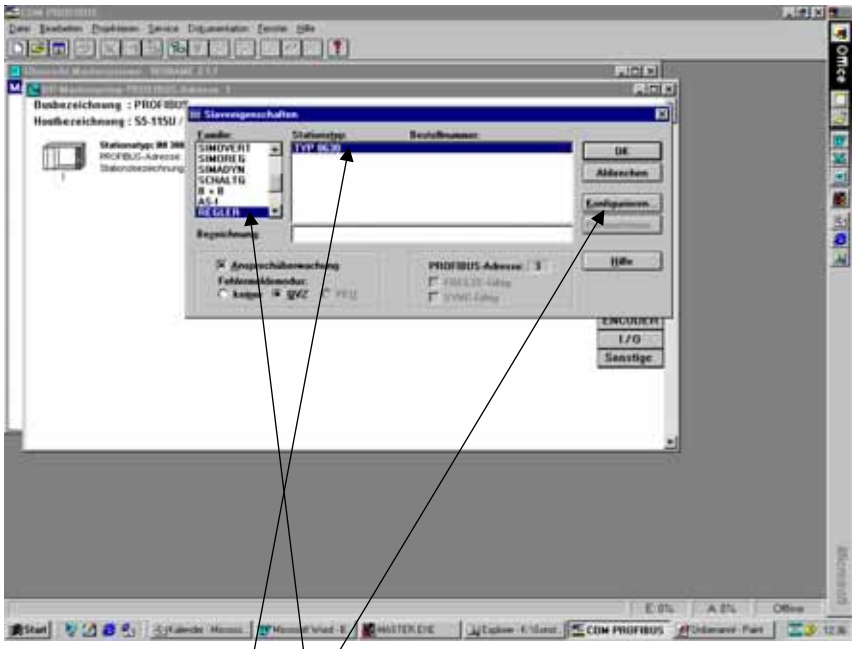

- Select CONTROLLER family
- Select Type 8630
- Select Configuration ...

The following screen appears:

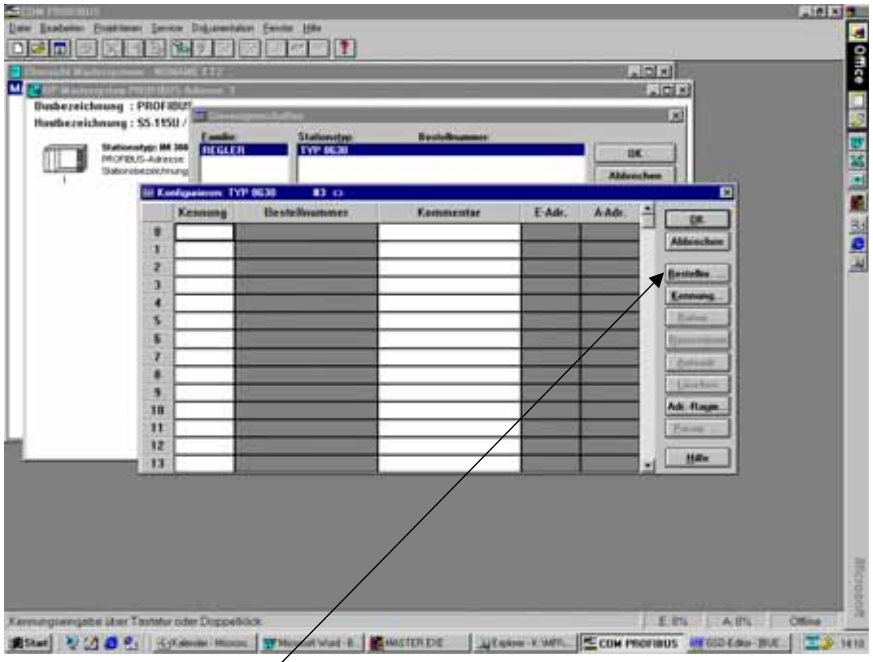

- Select Order no. ...

The following screen appears:

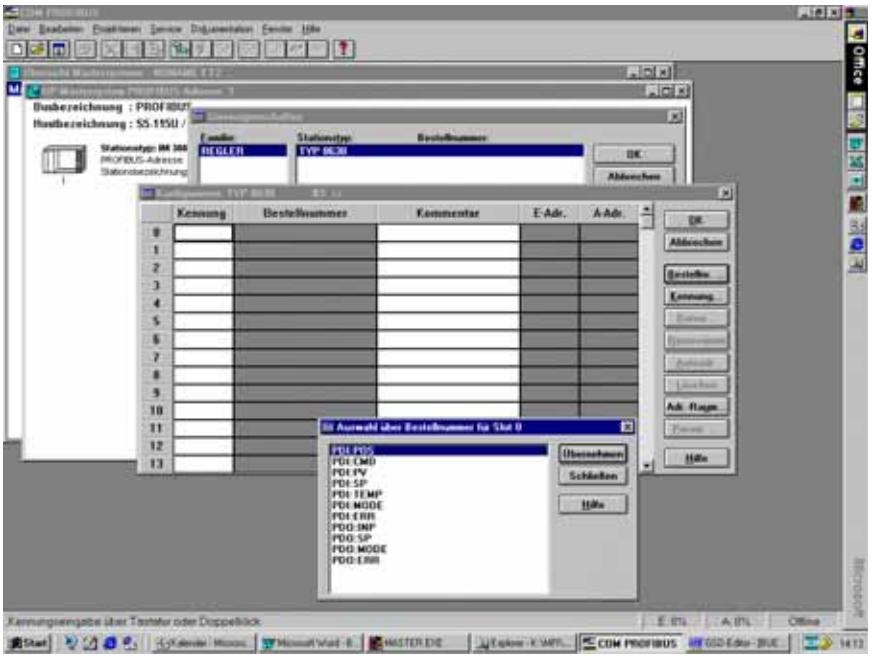

Here the process values are entered corresponding to the selection in the configuration menu of the TOP Control Continuous.

<u>Important:</u> 1. Observe sequence of process values
2. Input before output

- Select process value *PDI:POS*
- Select process value *PDI:MODE*
- Select process value *PDO:INP*
- Select process value *PDO:MODE*
  - Enter inputs and outputs in the process diagram.

Final configuration screen:

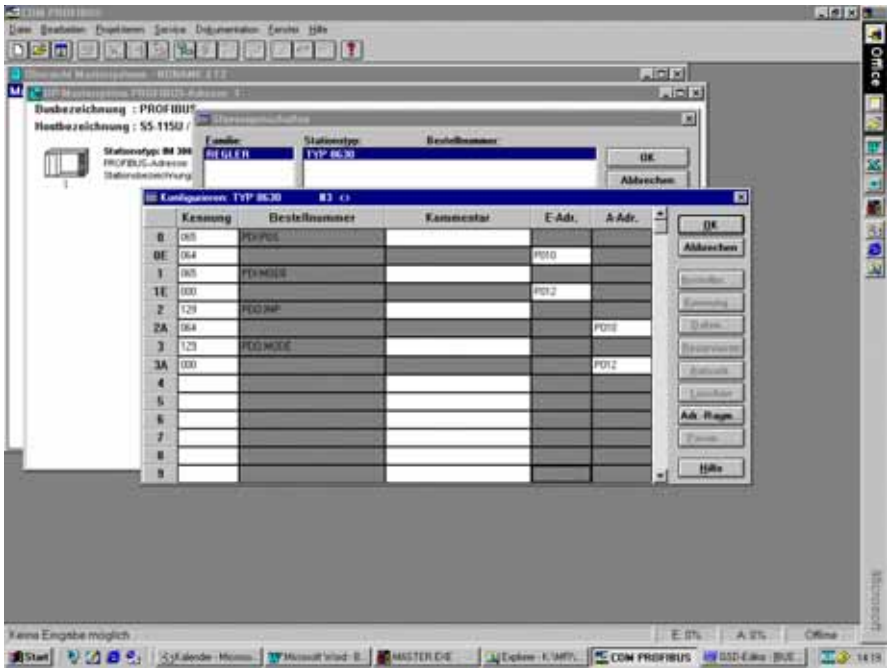

Example 2 with COM Profibus V3.3

Example for a process controller

Settings in the configuration menu of the TOP Control Continuous:

ADDR: 3	*PDI:*	*PDO:*
	• *PDI:PV*	• *PDO:SP*

Procedure as in Example 1.

Final configuration screen:

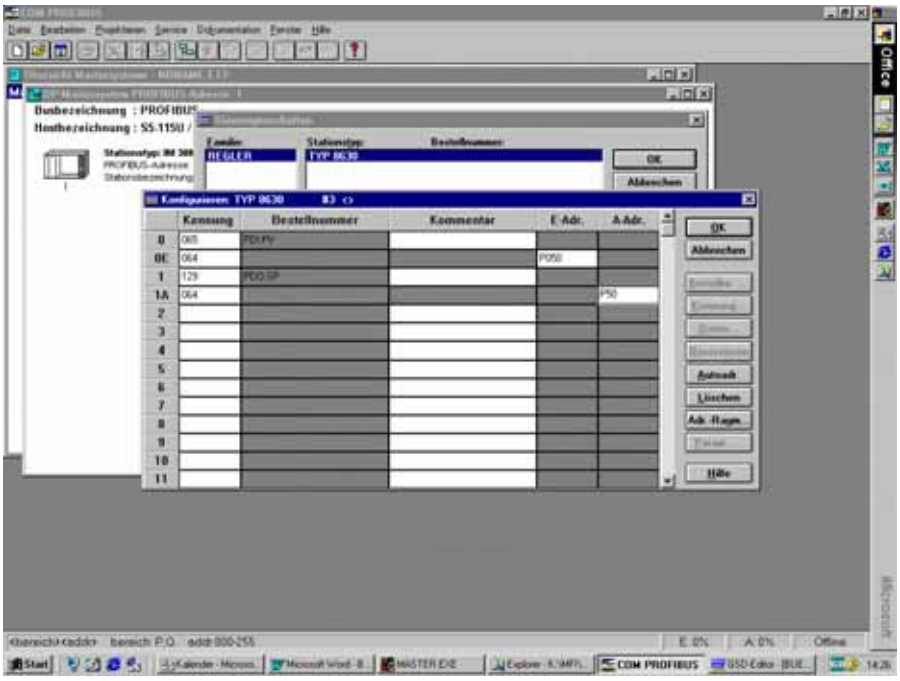

DEVICE-NET

MAN 1000010084 EN Version: K Status: RL (released | freigegeben) printed: 23.04.2009

General notes

The following sections of the complete operating instructions are not applicable to the DeviceNet variant of the TOP Control Continuous 8630:

- Variants of the TOP Control Continuous
- First commissioning
- Electrical connection
- Defining the basic settings
  - Function *INPUT*
  - Function *SPLTRNG*
  - Function *BIN-IN*
  - Function *OUTPUT*
  - Function *CAL.USER / CAL INP*
  - Function *CAL.USER / CAL OUT*
  - Function *CAL.USER / CAL SP*

Explanation of terms

DeviceNet

- *DeviceNet* is a field bus system based on the CAN protocol (Controller Area Network). It permits the networking of actuators and sensors (slaves) with higher ranking control devices (masters).

- In the *DeviceNet* the TOP Control Continuous is a slave device according to the Predefined Master/ Slave Connection Set defined in the DeviceNet specification. Polled I/0, Bit Strobed I/O and Change of State (COS) are supported as I/O connection variants.

- With the *DeviceNet* a distinction is made between cyclic or event-controlled transferred process messages of high priority (I/O Messages) and acyclic management messages of low priority (Explicit Messages).

- The protocol sequence corresponds to **DeviceNet Specification Release 2.0.**

MAN 1000010084 EN Version: K Status: RL (released | freigegeben) printed: 23.04.2009

Technical data

EDS file	BUER8630.EDS
Icons	BUER8630.ICO
Baud rate	125 kBit/s, 250 kBit/s, 500 kBit/s (adjustable via keys at the device or via network); Factory setting 125 kBit/s
Adress	0 ... 63; (adjustable via keys at the device or via network); Factory setting 63
Process data	7 static Input Assemblies (Input: from TOP Control Continuous to DeviceNet Master/Scanner) 4 static Output Assemblies

Total line length according to DeviceNet specification
(Total line length = sum of all mein and drop lines)

Baud rate	Maximum total line length	
	Thick Cable	Thin Cable
125 kBaud	500 m	100 m for all baud rates
250 kBaud	250 m	
500 kBaud	100 m	

Drop line length (Drop Lines)

Baud rate	Length of drop lines	
	Maximum length	Maximum total length of drop lines in network
125 kBaud	6 m for all baud rates	156 m
250 kBaud		78 m
500 kBaud		39 m

Safety settings on bus failure

The actuator moves to the position corresponding to the setpoint last transmitted (default setting).
For other setting options (see the chapter *Settings on the TOP Control Continuous)*

MAN 1000010084 EN Version: K Status: RL (released | freigegeben) printed: 23.04.2009

Interfaces

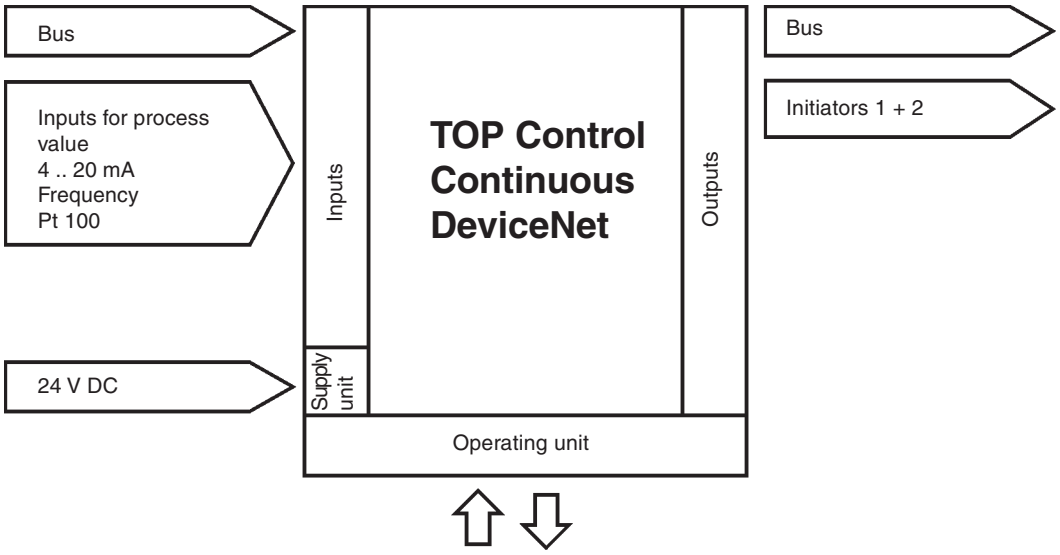

Electrical connection

For operation of the device, it is absolutely necessary to connect the 5-pole (bus) and the 4-pole circular plugs M12 (voltage supply).

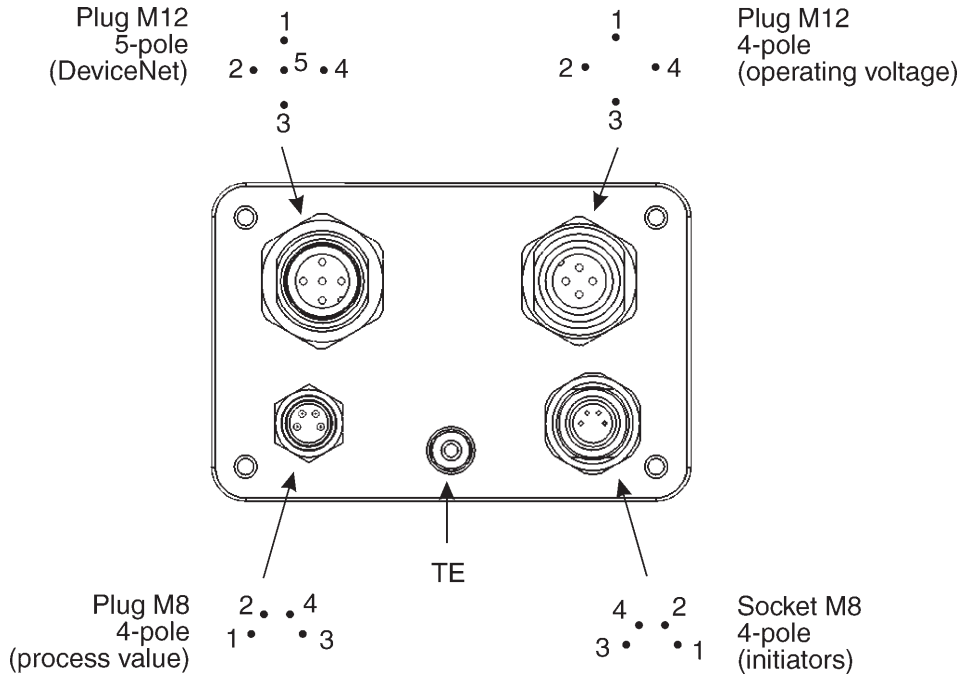

NOTE Voltage supply to the device is not from the DeviceNet voltage V+ and V-m but from the electrically isolated operating voltage.

MAN 1000010084 EN Version: K Status: RL (released | freigegeben) printed: 23.04.2009

Operating voltage (4-pole M12 circular plug)

Pin	Assignment	external circuit
1	+24 V	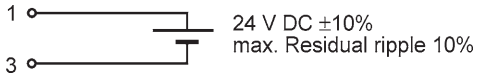
2	not assigned	
3	GND	
4	not assigned	

Bus connection (4-pole M12 circular plug)

Pin	Signal	Color	
1	screen	not assigned	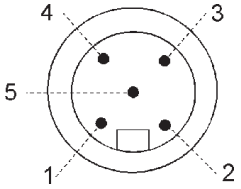
2	V+	red	
3	V-	black	
4	CAN H	white	
5	CAN L	blue	

Inductive proximity switches (4-pole M8 circular socket)

Pin	Assignment	Signal level
1	proximity switch 1 + (NO)	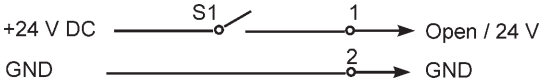
2	proximity switch 1 GND	
3	proximity switch 2 + (NO)	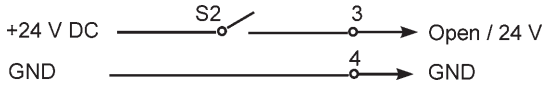
4	proximity switch 2 GND	

Process value (circular plug M8)

Input type *	Pin	Assignment	Jumper	external circuit
4...20 mA internally supplied	1 2 3 4	+ 24 V input transmitter output transmitter GND bridge after GND		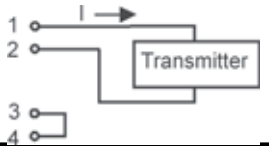
4...20 mA externally supplied	1 2 3 4	not assigned process actual + not assigned process actual -		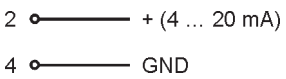

* adjustable via software

MAN 1000010084 EN Version: K Status: RL (released | freigegeben) printed: 23.04.2009

Process value (circular plug M8, continuation)

Input type *	Pin	Assignment	Jumper	external circuit
Frequency internally supplied	1 2 3 4	+ 24 V supply sensor clock input + not assigned clock input - / GND		1 + 24 V 2 Clock + 3 Clock - (GND)
Frequency externally supplied	1 2 3 4	not assigned clock input + not assigned clock input -		2 Clock + 3 Clock - (GND)
Pt-100 (see Note)	1 2 3 4	not assigned process actual 1 (current supply) process actual 2 (GND) process actual 3 (compensation)		2 3 4 Pt100

* adjustable via software

NOTE For line compensation reasons, connect sensor Pt-100 via three conductors. PIN3 and 4 must be bridged at the sensor.

Actual process value for the fluid flow controller option (2 M8 round plugs), or optionally: with temperature sensor input (3 M8 round plugs)

Input type	Plug	Pin	Assignment	Jumper	external circuit
internally supplied transmitter*	1	1 2 3 + 4	+ 24 V - transmitter supply p1 4 ... 20 mA - transmitter output p1 not assigned		1.1 +24 V 1.2 p1
	2	1 2 3 + 4	+ 24 V - transmitter supply p2 4 ... 20 mA - transmitter output p2 not assigned		2.1 +24 V 2.2 p2
option: temperature transmitter*	3	1 3 2 + 4	+ 24 V - transmitter supply 4 ... 20 mA - output transmitter temperature not assigned		3.1 +24 V 3.3 Temp

* With external supply of the sensors the mass of the standard signal must be connected with the mass of supply voltage.

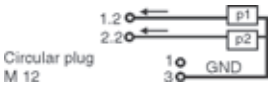

Termination connection for DeviceNet systems

On installing a DeviceNet system, it is important to have the correct termination circuit for the data lines. The circuit avoids the occurrence of faults through signal reflections on the data lines. For this purpose the main line is to be terminated at both ends with resistors of respectively 120 Ω and 1 / 4 W power loss.

MAN 1000010084 EN Version: K Status: RL (released | freigegeben) printed: 23.04.2009

Net topology of a DeviceNet system

Comprises a trunk line and several drop lines.
Trunk and drop lines are composed of identical material (see drawing).

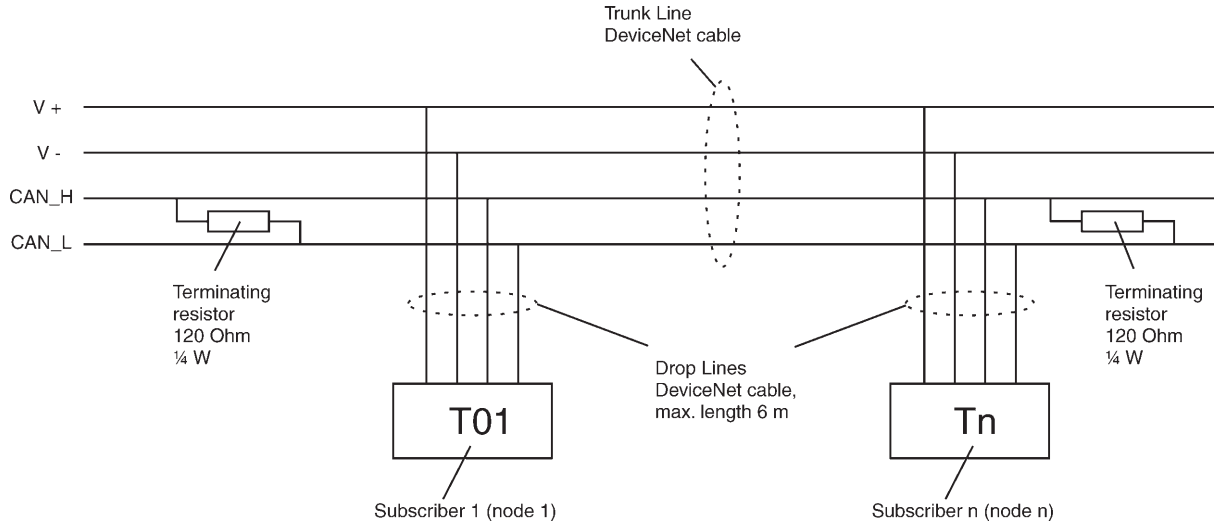

Settings on the TOP Control Continuous

Explanations of the menu items in the program run-off schematic

BUS ADDR Input of the device address (factory setting: 63)

The address can be changed via the keys at the device or via the bus. After each change, all Connection Objects are deleted followed by the execution of the normal Start-Up procedure for network access by a subscriber (as after a Reset or Power-Up).

ADDR XXX Values from 0 .. 63 can be set via the arrow keys; confirmation takes place with the MANUAL/AUTOMATIC key.

BUS RATE The baud rate can be changed via the keys at the device or via the bus. In each case a change has no effect until a Reset (transmission of a Reset message to the Identity Object) or a Power-Up is performed. That is to say, if the changed attribute baud rate is accessed before a Reset or Power-Up, the entered (changed) value does not agree with the still current (to be changed) baud rate of the network.

KBD XXX Selection of 125kbit/s, 250 kbit/s or 500kbit/s.

BUS FAIL **Activation for movement to saftey position on bus communication failure**

SPOS OFF The actuator moves to the position corresponding to the setpoint last transmitted (default setting).

SPOS ON With *SPOS ON* set, the following configurations can occur:
Activated menu item *SAFEPOS*
On error in bus communication, the actuator moves to the position set under *SAFEPOS*.
Deactivated menu item *SAFEPOS*
On error in bus communication, the actuator moves to the end position it would occupy in the zero voltage condition.

MAN 1000010084 EN Version: K Status: RL (released | freigegeben) printed: 23.04.2009

Settings in the main menu

The following settings are to be made in the main menu of the device, at variance with the statements in these operating instructions:

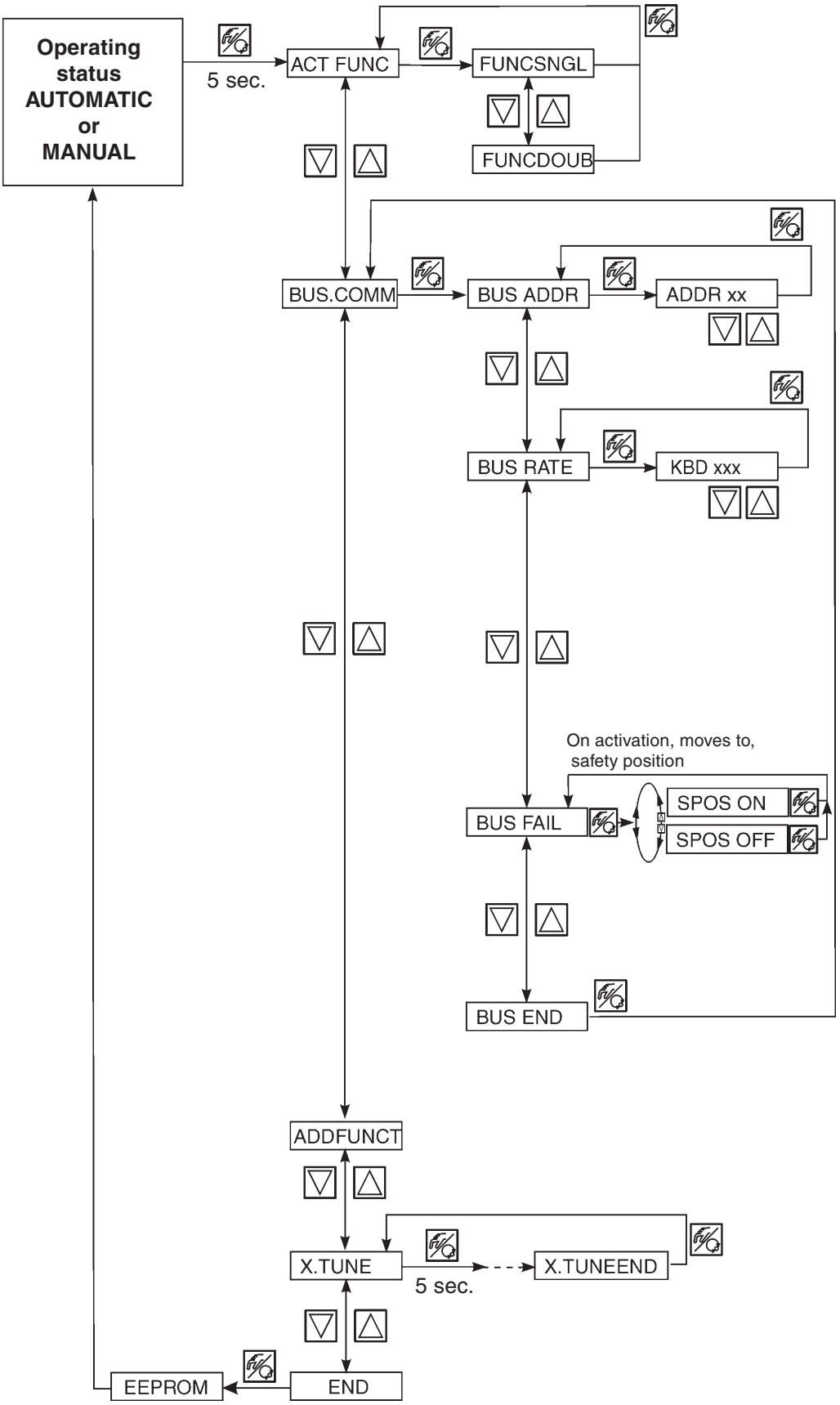

Configuration the process data

5 static input and 2 static output assemblies are available for the **transmission of process data** via an I/O connection. Select attributes for transmission jointly as process data via an I/O connection are combiened in an object in these Assemblies.
Selection of the process data takes place by setting the device parameters Active Input Assembly and Active Output Assembly, or where supported by the DevicNet Master/Scanner, by setting the Produced Connection Path and Consumed Connection Path on initializing an I/O connection corresponding to the DeviceNet specification.

Static input assemblies

Name	Adress Data Attribute of ther Assemblies for Read access, Class, Instance, Attribute	Format of the Data Attribute
Pos+ERR (factory setting)	4, 1, 3	Byte 0: POS low Byte 1: POS high Byte 2: ERR
POS+CMD+ERR	4, 2, 3	Byte 0: POS low Byte 1: POS high Byte 2: CMD low Byte 3: CMD high Byte 4: ERR
PV+ERR	4, 3, 3	Byte 0: PV low Byte 1: PV high Byte 2: ERR
PV+SP+ERR	4, 4, 3	Byte 0: PV low Byte 1: PV high Byte 2: SP low Byte 3: SP high Byte 4: ERR
PV+SP+CMD+ERR	4, 5, 3	Byte 0: PV low Byte 1: PV high Byte 2: SP low Byte 3: SP high Byte 4: CMD low Byte 5: CMD high Byte 6: ERR
PV+P1+P2+MTMP+ERR	4, 6 , 3	Byte 0: PV low Byte 1: PV high Byte 2: P1 low Byte 3: P1 high Byte 4: P2 low Byte 5: P2 high Byte 6: MTMP low Byte 7: MTMP high Byte 8: ERR
PV+SP+CMD+P1+P2+MTMP+ERR	4, 7, 3	Byte 0: PV low Byte 1: PV high Byte 2: SP low Byte 3: SP high Byte 4: CMD low Byte 5: CMD high Byte 6: P1 low Byte 7: P1 high Byte 8: P2 low Byte 9: P2 high Byte 10: MTMP low Byte 11: MTMP high Byte 12: ERR

MAN 1000010084 EN Version: K Status: RL (released | freigegeben) printed: 23.04.2009

The adresses given in the table *Static Input Assemblies* can be used as path statement for the attribute *Produced Connection Path* of an I/O connection, whereby the attributes described in more detail in the following table can be transferred as Input Process Data via this I/O connection. Independently from thsi however, it is also possible to acyclically access the attributes combined in the *Assemblies* via *Explicit Messages.*

Name	**Description of the Data Attributes**	**Attribute address Class, Instance, Attribute; data type, length**
POS	Actual Position (Actual Position) Actual value of position controller in ‰. Value range 0...1000. However values <0 respectively >1000 are also possible if e.g. AUTOTUNE has not run correctly.	111, 1, 59; INT, 2 Byte
CMD	Position Setpoint (Position Setpoint) Setpoint value of position controller in ‰. Value range 0...1000.	111, 1, 58; UINT, 2 Byte
MTMP	Media temperature value range -20 ... 150 Temperature of the medium in °C. The value will be predefined from the menu, the bus, or using a temperature transmitter.	120, 1, 9; INT, 2 Byte
P2	Back pressure P2 Pressure in mbar (rel) that is present behind the process valve. The value will be determined using a pressure transmitter. Value range -1013 ... 16000	120, 1, 8; INT, 2 Byte
P1	Forward pressure P1 Pressure in mbar (rel) that is present in front of the process valve. The value will be determined using a pressure transmitter. Value range -1013 ... 16000	120, 1, 7; INT, 2 Byte
PV	Process actual value (Process Value) Actual value of process controller in physical unit (as set in the menu P.CO INP respectively P.CO SCAL), max. value range –999...9999, depending on the internal scaling.	120, 1, 3; INT, 2 Byte
SP	Process Setpoint (Process Setpoint) Setpoint value of process controller in physical unit (as set in the menu P.CO INP respectively P.CO SCAL), max. value range –999...9999, depending on the internal scaling.	120, 1, 2; INT, 2 Byte
ERR	Error (Error) Gives the number of the process value (output) which has not been entered. The value is retained until deleted by the acyclic writing of the attribute „Error“ with „0“(access via Explicit Message – Set Attribut Single). HEX 0X14 INP 0X15 SP 0X18 MTMP	100, 1, 1; USINT, 1Byte

MAN 1000010084 EN Version: K Status: RL (released | freigegeben) printed: 23.04.2009

Static Output Assemblies

Name	Address Data Attribute of the assemblies for Write/Read access Class, Instance, Attribute	Format of the Data Attribute
INP (factory setting)	4, 21, 3	Byte 0: INP low Byte 1: INP high
SP	4, 22, 3	Byte 0: SP low Byte 1: SP high
MTMP	4, 23, 3	Byte 0: MTMP low Byte 1: MTMP high
SP+MTMP	4, 24, 3	Byte 0: SP low Byte 1: SP high Byte 2: MTMP low Byte 3: MTMP high

The addresses given in the table *Static Output Assemblies* can be used as path statement for the attribute *Consumed Connection Path* of an I/O connection, whereby the attributes described in more detail in the following table can be transferred as Output Process Data via this I/O connection. Independently from this however, it is also possible to acyclically access the attributes combined in the *Assemblies* via *Explicit Messages*.

Name	Description of the Output Data Attributes	Attribute address, Class, Instance, Attribute; data type, length
INP	Position setpoint Setpoint of position controller in ‰. Value range 0...1000. In "purely" position controller operation (*PCONTRL* inactiv) transmission of the setpoint position *INP* is necessary; as process controller (*PCONTRL* activ) the transmission of *INP* is not possible. In the case of too small or too large a value, the last valid is used and indicated in *ERR* with HEX 14.	111, 1, 58; UINT, 2 Byte
SP	Process-set-value (Process Setpoint) Set-value process controller in physical unit (as set up in the *P.CO INP* or *P.CO SCAL* menu), max. value range –999...9999, depending on the internal scaling. If the value is too small or too large, the last valid value will be used and will be displayed in *ERR* with HEX 15.	120, 1, 2; INT, 2 Byte
MTMP	Medium temperature Temperature of the medium in °C. Value range -20 ... 150. If the value is too small or too large, the last valid value will be used and will be displayed in *ERR* with HEX 18.	120, 1, 9; INT, 2 Byte

MAN 1000010084 EN Version: K Status: RL (released | freigegeben) printed: 23.04.2009

Bus status display

The bus standard is indicated on the display.

Display message	Device status	Explanation/problem elimination
BUS OFFL alternates with the display value set	offline	Device is not connected to the bus; the network access procedure (Duplicate MAC-ID-Test, duration 2 s) has not yet ended or the device is the sole active network subscriber. - Is the baud rate correctly set throughout the network? - Is the bus connection incl. plug in assignment correct? - Is the voltage supply and bus connection of the other subscribers correct?
BUS NOCO alternates with the set indication value	online, no connection to Master	Device is correctly connected to the bus, the network access procedure has been completed without error, but no connection is established with the Master.
2 dots left, under the set indication value	online, Explicit Messaging only	Messaging connection with Master is established. No I/O connection is in the Established state (no I/O data exchange).
4 dots left, under the set indication value	online, active I/O connection	An I/O connection is in the Established state (I/O data exchange).
BUS TIME alternates with the set indication value	I/O connection Timeout	An I/O connection is in the *TIME OUT* state. - new establishmend of connection by Master; ensure the I/O data are transferred cyclically, or with confirmed*COS,* the corresponding Acknowledge Messages are sent by the Master.
BUS CRIT alternates with the set indication value	critical bus error	Different device with same address in the network, or *BUS OFF* due to communication problems: - change address of device and restart device. - error analysis in network with a bus monitor.

MAN 1000010084 EN Version: K Status: RL (released | freigegeben) printed: 23.04.2009

Configuration example 1

The example describes the basic procedure on configuring the device when using the software *RSNetworx for DeviceNet* (Rev. 2.11.51.0).

Installation of the EDS file

The installation of the EDS file on the supplied floppy takes place with the aid of the tool *EDS Installation Wizard* belonging to *RSNetworx*.

The Icon, also supplied on floppy can also be assigned in the course of the installation procedure (where this does not take place automatically).

Address allocation

There are two possibilities for the assignment of addresses to the devices.
Firstly an address can be set to the desired value over the range 0 … 63 via the keys at the device (see chapter *Settings at TOP Control Continuous*); secondly a change of address of connected devices can be carried out via the bus with the aid of the tool *Node Commissioning* belonging to *RSNetworx*. Therefore, the sequential addition in an existing network of devices with the default address 63 is a simple matter.

The figure shows how the new address 2 is assigned to a device with the address 63.

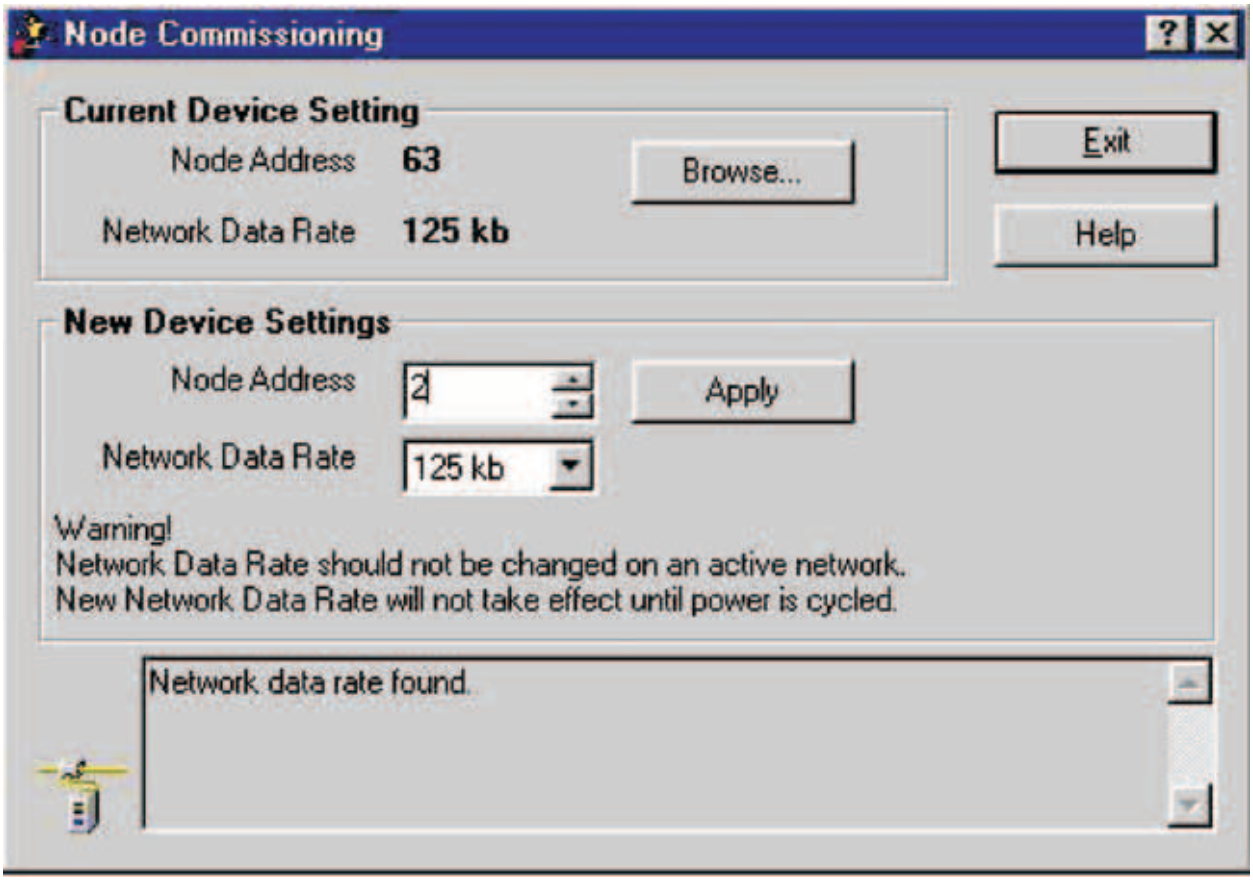

MAN 1000010084 EN Version: K Status: RL (released | freigegeben) printed: 23.04.2009

Offline parametrization of the device

After the addition of a device in the DeviceNet configuration of *RSNetworx*, the device can be parametrized offline.

The figures shows by way of example, how an Input Assembly (Input Process data transferable via I/O connection) at variance with the factory setting can be selected. Note however that the length of the process data must be appropriately adapted with a following configuration of the DeviceNet Masters/ Scanners (see chapter *Configuration, Example 2*).

All parameter changes carried out offline must be rendered effective for the real device by a Download Procedure.

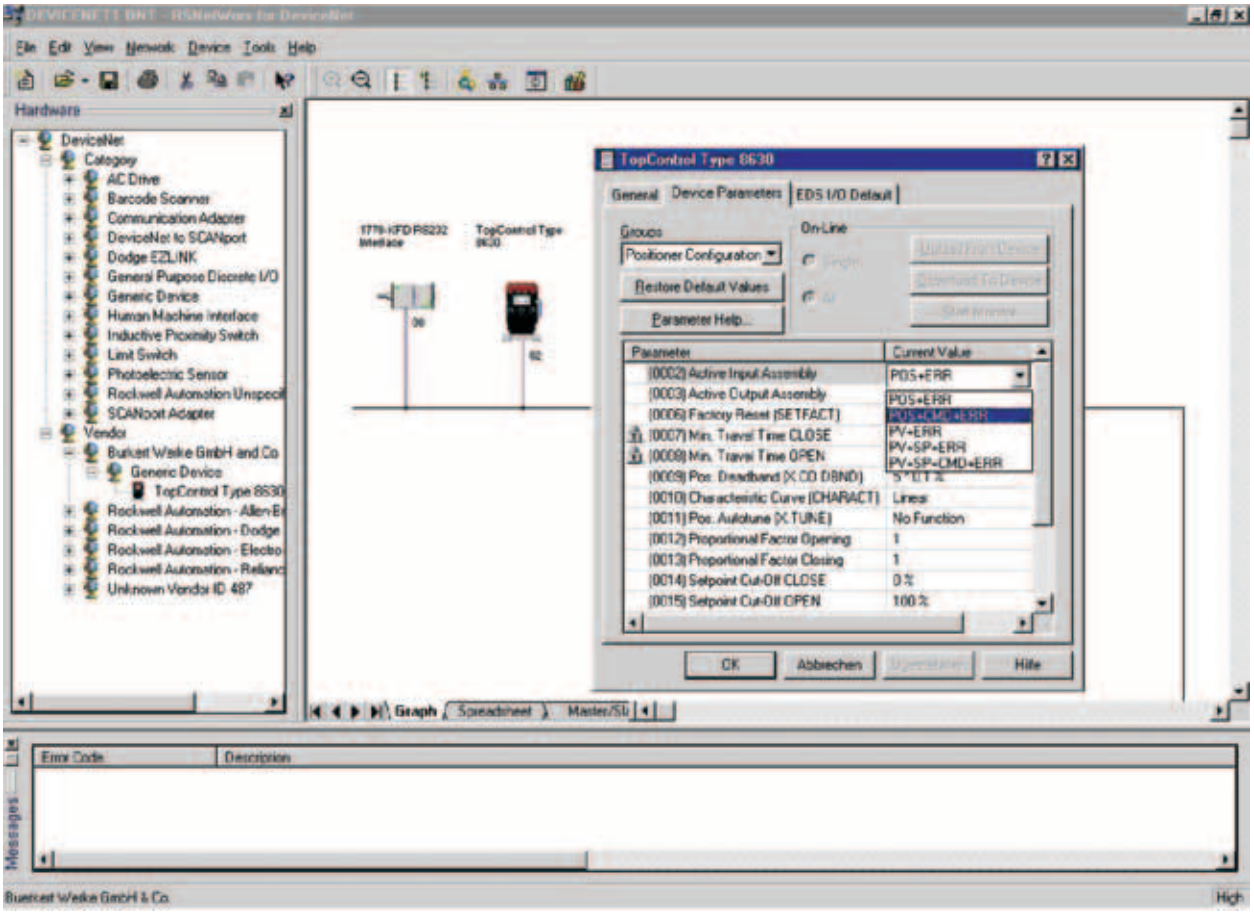

Online parametrization of the device

Devices can also be parameterized online. Here it can be selected whether only a single parameter or all parameters of a group are to be uploaded from the device or downloaded to the device.

The facility also exists for cyclically transferring single parameters or all the parameters of a group in monitor mode. This can be useful, especially for commissioning purposes.

Shown in the figure is the group of process values, respectively Diagnostic information. If the button *Start Monitor* is pressed, these values are cyclically updated. However, Explicit Messages are also used for this cyclic access (no I/O connections).

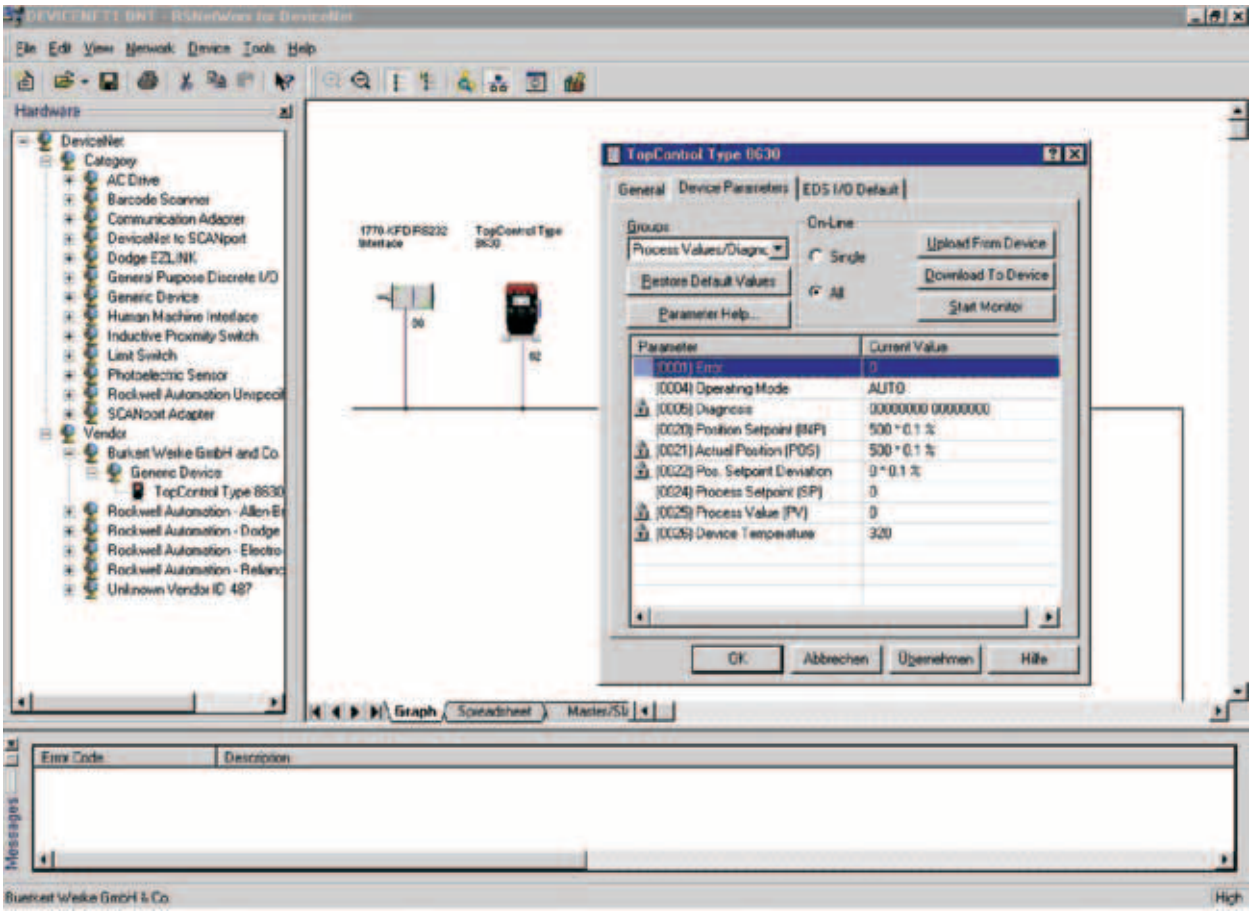

Configuration example 2

This example describes the basic procedure for setting-up the process mapping of a DeviceNet Master / Scanner, using the software *RSNetworx for DeviceNet* (Rev. 2.11.51.0).

Setting-up the Scanlist and setting the I/O parameters

First of all the *Scanlist* of the DeviceNet Master / Scanner is set-up. For this the devices listed in the left hand part of the associated window are transferred to the right hand part of the window. Then a change of the I/O parameters can be carried out for each device transferred to the Scanlist. This is necessary when, on configuring the relevant TOP Control Continuous, Assemblies have been selected which differ from the default settings.

Shown in the figure is the setting of the I/O parameters with selected

Input-Assembly *POS+CMD+ERR* (5 bytes long) and selected
Output-Assembly INP (2 bytes long; default-Assembly - no change required).

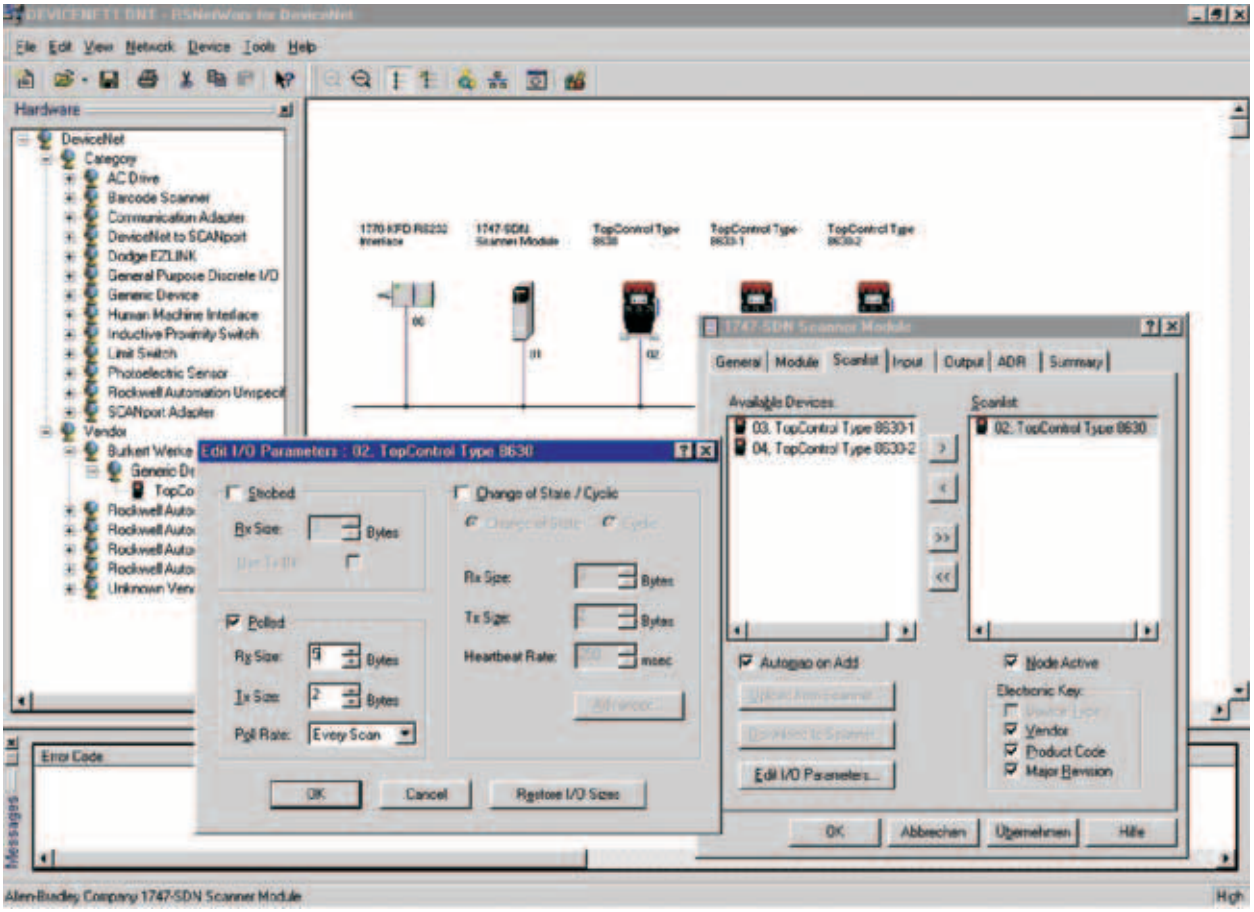

Setting up the process mapp (mapping)

Using the function *AUTOMAP* it is possible to assign the input data of the devices listed in the Scanlist to the process mapping of the DeviceNet Master / Scanner.

In our example this resulted in the assignment **shown in the figure**.
For example, the Input Process values of the TOP Control Continuous with the address 4 are assigned to the internal addresses of the scanner in the following manner:

Actual position:	I:1.6
Setpoint position:	I:1.7
Error:	I:1.8

Therefore if the actual position of the TOP Control Continuous with the address 4 is to be read from a control program, this takes place via an access to 1:1.6.

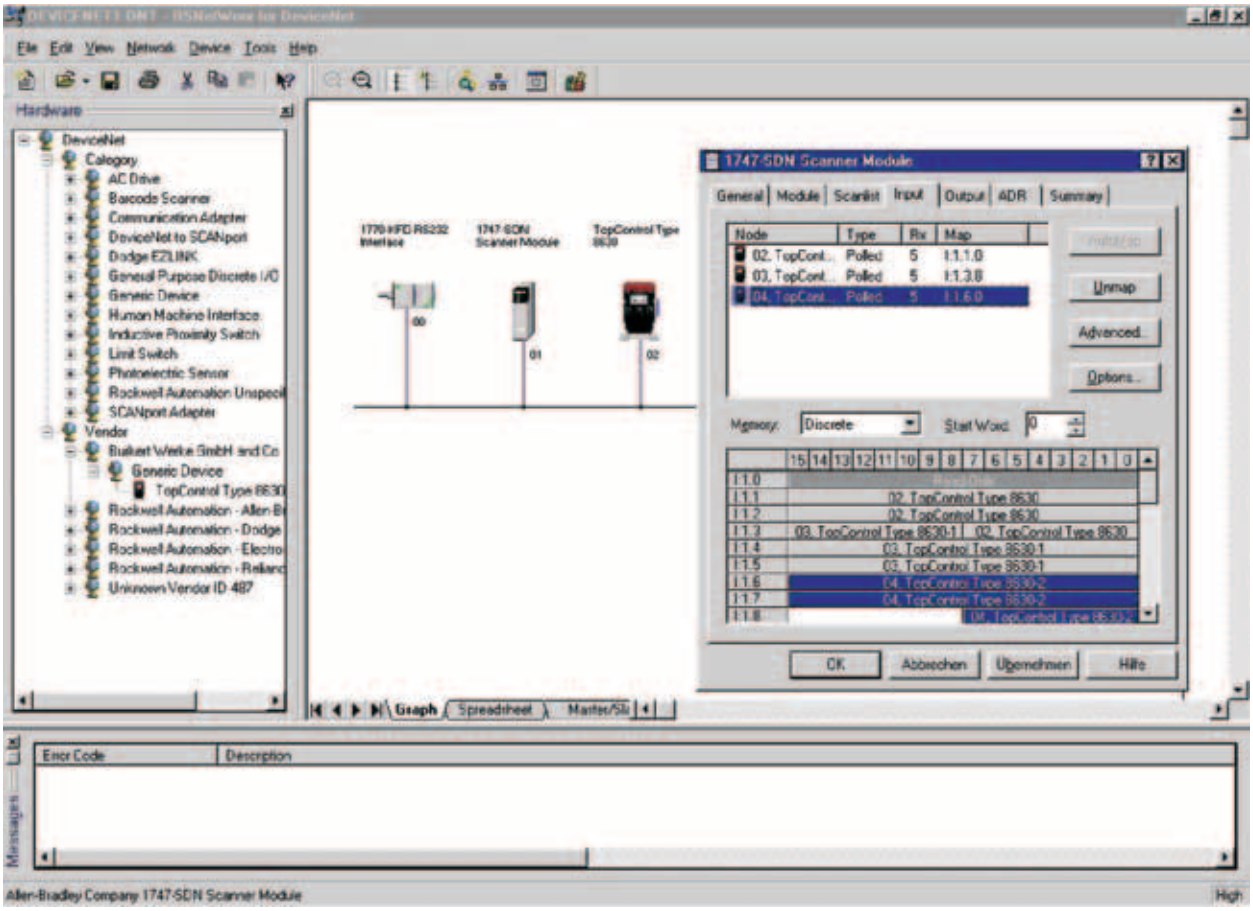

MAINTENANCE AND ERROR CORRECTION ON THE POSITIONER

MAN 1000010084 EN Version: K Status: RL (released | freigegeben) printed: 23.04.2009

Maintenance

When operated according to these Operating Instructions, **the TOP Control Continuous** is **maintenance free.**

Error messages and malfunctions

Error messages on the LC display

Error message on switching on

Display	Causes of error	Remedy
CMD FAUL	signal error set-value positioner	check signal
EE FAULT	EEPROM faulty	none, device faulty

Error message on execution of the function *X.TUNE*

Display	Causes of error	Remedy
X.ERR 1	No compressed air connected	Connect compressed air
X.ERR 2	Compressed air failure during *AUTOTUNE*	Check compressed air supply
X.ERR 3	Actuator or positioning system leaky on exhaust side	None, device faulty
X.ERR 4	Actuator system leaky on pressurized side	None, device faulty
X.ERR 6	The end positions for *POS-MIN* and *POS-MAX* are too near to each other	Check whether the allocation of the end positions to *POS-MIN* and *POS-MAX* via the function *TUNE-POS* is correct. If incorrect: Execution *TUNE-POS* again. If correct: *TUNE-POS* with this arrangement of the end positions is not possible since they are too close together.
X.ERR 7	False allocation of *POS-MIN* and *POS-MAX*	To determine *POS-MIN* and *POS-MAX*, move the actuator in each case in the direction shown on the display.

Other malfunctions

Problem	Possible causes	Remedy
POS = 0 (with CMD > 0 %) or POS = 100 %, (by CMD < 100 %)	Tight-closing function *(CUTOFF)* has been inadvertently activated	Deactivate tight-closing function

MAN 1000010084 EN Version: K Status: RL (released | freigegeben) printed: 23.04.2009

MAINTENANCE AND ERROR CORRECTION ON THE PROCESS CONTROLLER

MAN 1000010084 EN Version: K Status: RL (released | freigegeben) printed: 23.04.2009

Maintenance

When operated according to these Operating Instructions, the **TOP Control Continuous** is **maintenance free.**

Error messages and malfunctions

Error messages on the LC display

General error messages

Display	Causes of error	Remedy
CMD FAUL	signal error set-value, positioner	check signal
SP FAULT	signal error set-value, process controller	check signal
PV FAULT	signal error actual value, process controller	check signal
PT FAULT	signal error actual value, Pt-100	check signal
P1 FAULT	signal error actual value, P1 fluid flow controller	check signal
P2 FAULT	signal error actual value, P2 fluid flow controller	check signal
TMP FAUL	signal error actual value, temperature, fluid flow controller	check signal
EE FAULT	EEPROM faulty	none, device faulty
MFI FAUL	Fieldbus board faulty	

Error messages on execution of the function *X.TUNE*

Display	Causes of error	Remedy
X.ERR 1	No compressed air connected	Connect compressed air
X.ERR 2	Compressed air failure during *AUTOTUNE*	Check compressed air supply
X.ERR 3	Actuator or positioning system leaky on exhaust side	None, device faulty
X.ERR 4	Actuator system leaky on pressurized side	None, device faulty
X.ERR 6	The end positions for *POS-MIN* and *POS-MAX* are too near to each other	Check whether the allocation of the end positions to *POS-MIN* and *POS-MAX* via the function *TUNE-POS* is correct. If incorrect: Execution *TUNE-POS* again. If correct: *TUNE-POS* with this arrangement of the end positions is not possible since they are too close together.
X.ERR 7	False allocation of *POS-MIN* and *POS-MAX*	To determine *POS-MIN* and *POS-MAX*, move the actuator in each case in the direction shown on the display.

MAN 1000010084 EN Version: K Status: RL (released | freigegeben) printed: 23.04.2009

Error messages on execution of the function *P.Q'LIN*

Display	Causes of error	Remedy
Q.ERR 1	No compressed air connected No change in process value	Connect compressed air Check process, switch on pump or open shut-off valve if necessary
Q.ERR 2	Current fixed point of the valve stroke was not reached because • Pressure supply failre during *P.Q'LIN* • No *AUTOTUNE* was executed	• Check pressure supply • execute *AUTOTUNE*

Error message on execution of the function LEAK MEAS

Display	Cause of error	Remedy
L.ERR 1	No admission pressure at the controller unit (> 50 mbar).	Switch on compressor before start of leakage measurement.
L.ERR 2	Control does not fully close.	Execute AUTOTUNE.
L.ERR 3	No leakage detectable: the difference between admission pressure and conveying pressure is so low, even at slight valve opening, that no air leak can be measured.	The leakage characteristic must be deactivated since the precision of air flow control cannot be raised.
	Whilst the valve is open the delivery pressure is not increased, which means that no restart points for the characteristic can be recorded.	Make sure that the conveying pipe is closed and the blocking air is open.

MAN 1000010084 EN Version: K Status: RL (released | freigegeben) printed: 23.04.2009

Other malfunctions

Problem	Possible causes	Remedy
POS = 0 (with *CMD* > 0%) or *POS* = 100%,(with *CMD* < 100%) *PV* = 0 (with *SP* > 0) or *PV* = $PV_{\perp}$ (with *SP* > $SP_{\perp}$)	Tight-closing function *(CUTOFF)* has been inadvertently activated	Deactivate tight-closing function
Only with devices with analog repeat: *red LED* does light	Binary output: Current > 100 mA short circuit	Check connection of binary output
Binary output does not switch		
Only with devices with process controller: Device does not work as a controller despite correctly executed settings.	Menu item *P.CONTRL* stands in main menu. The device thus works as a process controller and expects a process value at the corresponding input.	Remove the menu item *P.CONTRL* from the main menu.

MAN 1000010084 EN Version: K Status: RL (released | freigegeben) printed: 23.04.2009

GENERAL RULES
(APPENDIX)

MAN 1000010084 EN Version: K Status: RL (released | freigegeben) printed: 23.04.2009

Selection criteria for continuous valves

The following criteria are of decisive importance for optimal control behaviour and attainment of the maximum flow rate through the valve:

- Correct choice of flow coefficient, which is defined essential by the size of the valve;
- Good matching of the valve size to the pressure conditions, taking into consideration the other flow resistances in the system.

Dimensioning guidelines can be given on the basis of the flow coefficient (k_v). The k_v value refers to the standardized conditions with respect to pressure, temperature and media properties.

The k_v value is defined as the flow rate in m³/h of wasser through a component at a pressure difference Dp of 1 bar and a temperature of 20°C.

With continuous valves the " k_{vs} value" is additionally used. This specifies the k_v value when the continuous valve is fully open.

Depending on the specified data, the following cases must be distinguished on selection of a valve:

a) The pressures before and after the valve p_1 and p_2 are known at which the desired maximum flow rate Q_{max} is to be attained:

The required k_{vs} value is obtained from:

$$k_{VS} = Q_{\max} \cdot \sqrt{\frac{\Delta p_0}{\Delta p}} \cdot \sqrt{\frac{\rho}{\rho_0}} \qquad (1)$$

where:

k_{VS}	is the flow coefficient of the continuous valve when fully open [m³/h]
Q_{max}	is the maximum volumetric flow rate [m³/h]
Δp_0	= 1 bar; the pressure drop over the valve as in the definintion of k_V
r_0	= 1000 kg/m³; the density of water as in the definition of k_V
Δp	is the pressure drop over the valve [bar] and
r	is the density of the medium [kg/m³]

b) The pressures at the inlet and outlet of the overall system (p_1 and p_2), are known at which the desired maximum flow rate Q_{max} is to be attained:

Step 1:	Calculate the flow coefficient of the overall system k_{Vges} from equation (1).
Step 2:	Measure the flow rate through the system without the continuous valve (e.g. by short-circuiting the piping where the vale is installed).
Step 3:	Calculate the flow coefficient of the system without the continuous valve (k_{Va}) from equation (1).
Step 4:	Calculate the required k_{VS} value of the continuous valve (k_{VS}) from equation (2).

$$k_{VS} = \sqrt{\frac{1}{\frac{1}{k_{Vges}^{\ 2}} - \frac{1}{k_{Va}^{\ 2}}}} \qquad (2)$$

NOTE

The k_{VS} of the continuous valve should have at least the value valculated from the equation (1 or 2) relevant to the application, but under no circumstances be very much greater.

The rule of thumb often used with switching valves, "somewhat larger never hurts", can be strongly detrimental to the control behaviour of continuous valves!

Determination in practice of the upper limit to the k_{VS} value of the continuous valve is possible by means of the so-called "valve authority" Ψ:

$$\Psi = \frac{(\Delta p)_{V0}}{(\Delta p)_0} = \frac{k_{Va}{}^2}{k_{Va}{}^2 + k_{VS}{}^2} \qquad (3)$$

$(\Delta p)_{V0}$ is the pressure drop over the fully opened valve and

$(\Delta p)_0$ is the pressure drop over the entire system.

NOTE

With a valve authority Y < 0.3 the continuous valve is overdimensioned.

With the valve fully open, in this case the flow resistance is significantly smaller than that of the other fluidic components in the system. This means that only in the lower opening range is the valve position dominant in the operating characteristic. For this reason, the operating characteristic is strongly deformed.

By selection of a progressive (equiprocentile) characteristic between position setpoint and valve stroke, this can be partially compensated and the operating characteristic linearized within certain limits. **However, the valve authority Y should be > 0.1, even when using a corrected characteristic.**

The control behaviour (control performance, settling time) when using a corrected characteristic is strongly dependent on the operating point.

MAN 1000010084 EN Version: K Status: RL (released | freigegeben) printed: 23.04.2009

Characteristics of PID controllers

A PID controller has a proportional, an integral and a differential component (P, I and D components).

P component

Function: $Y = Kp \cdot Xd$

Where Kp is the proportional action factor (amplification factor). It is given by the ratio of the correcting range ΔY to the proportional range ΔXd.

Characteristic and step response of the P component of a PID controller

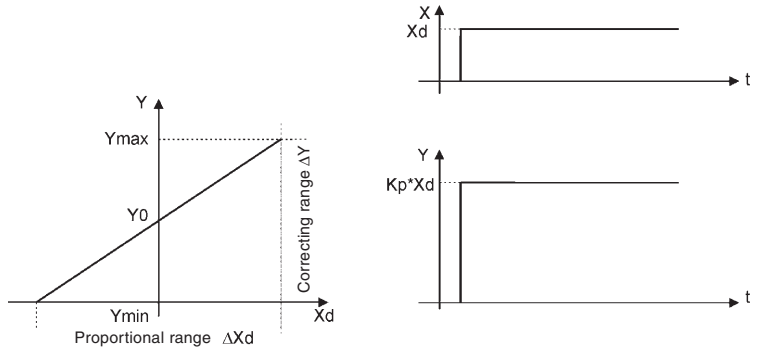

Characteristic line ***Step response***

Characteristics

A pure P controller works theoretically undamped, i.e. it is fast and dynamically favourable. It has a residual control difference, i.e. it does not completely eliminate the effects of disturbances and is thus relatively unfavourable from a static viewpoint.

MAN 1000010084 EN Version: K Status: RL (released | freigegeben) printed: 23.04.2009

I component

Function: $Y = \frac{1}{Ti}\int Xd\,dt$

Ti is the integration or floating time. It is the time that expires until the controller output has run through the entire correcting range.

Characteristic and step response of the I component of a PID controller

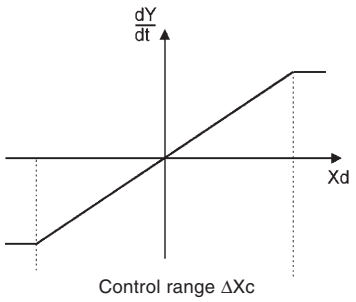

Characteristic line

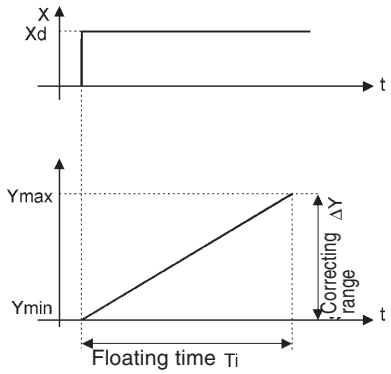

Step response

Characteristics

A purely I controller completely eliminates the effects of disturbances. It thus has a favourable static behaviour. Because of its finite correcting speed, it works more slowly than a P controller and tends to oscillation. It is hence dynamically relatively unfavourable.

MAN 1000010084 EN Version: K Status: RL (released | freigegeben) printed: 23.04.2009

D component

Function: **Y = Kd d Xd/dt**

The higher Kd is, the stronger the D influence is.

Characteristics and step response of the D component of a PID controller

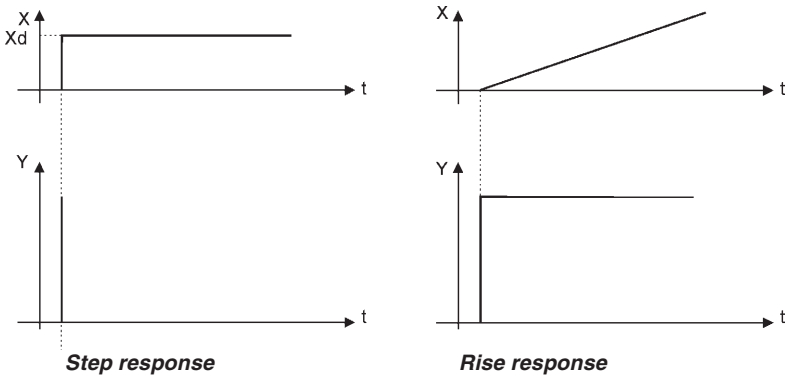

Step response ***Rise response***

Characteristic

A controller with a D component reacts to changes in the controlled variable and can thus reduce more quidckly any control differences that occur.

MAN 1000010084 EN Version: K Status: RL (released | freigegeben) printed: 23.04.2009

Superimposing the P, I and D components

Function: $\mathbf{Y = Kp\ Xd + \frac{1}{Ti} \int Xd\ dt + d\ Xd/dt}$

Substituting Kp · Ti = Tn and Kd/Kp = Tv we obtain for the ***function on the PID controller:***

$$\mathbf{Y = Kp\ (Xd + \frac{1}{Tn} \int Xd\ dt + Tv\ \ dXd/dt)}$$

Kp is the proportional action factor/amplification factor

Tn is the reset time

(the time required to obtain the same change in correcting variable as was caused by the P component) and

Tv is the rate time

(the time by which a certain change in correcting variable is obtained earlier with the D component than t would have been with a pure P controller).

Step response and rise response of the PID controller

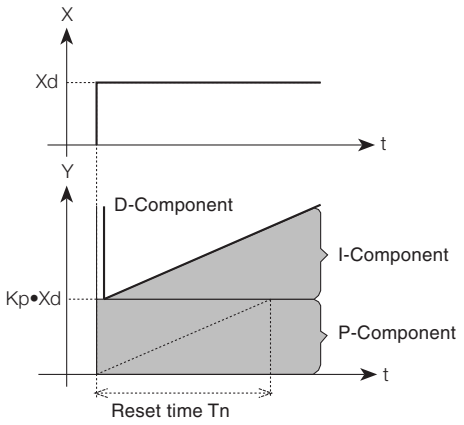

Step response of the PID controller

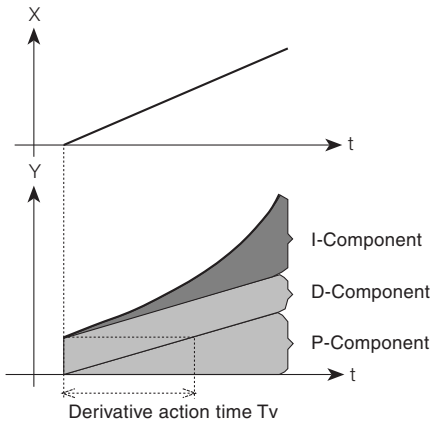

Rise response of the PID controller

MAN 1000010084 EN Version: K Status: RL (released | freigegeben) printed: 23.04.2009

Function of a real PID controller

D component with delay

In the process controller of the positioner, the D component is realized with a delay T.

Function $T \frac{dY}{dt} + Y = Kd \frac{dXd}{dt}$

Superimposing the P, I and DT components

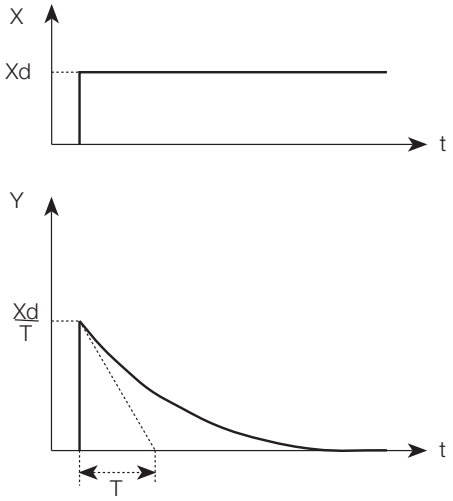

Function of the real PID controller

$$T \frac{dY}{dt} + Y = Kp \left(Xd + \frac{1}{Tn} \int Xd\, dt + Tv \frac{dXd}{dt}\right)$$

Step response of the real PID controller

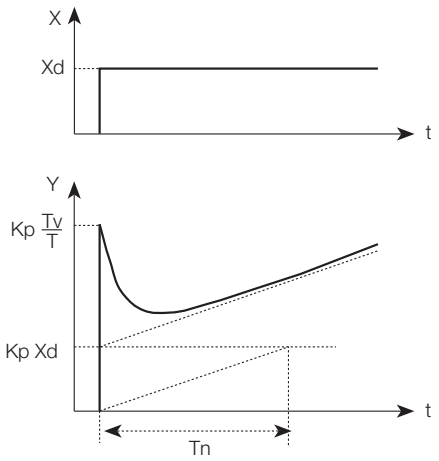

MAN 1000010084 EN Version: K Status: RL (released | freigegeben) printed: 23.04.2009

Rules for setting PID controllers

The literature on control technology contains a number of rules by which a favourable setting of the controller parameters can be determined experimentally. In order to avoid incorrect settings, the conditions under which the rules were set up in each case must be kept in mind. Apart from the characteristics of the controlled member and the controller itself, it makes a difference whether a change in disturbance or a command variable is to be compensated.

Setting rules of Ziegler and Nichols (oscillation method)

With this method, the controller parameters are set on the basis of the behaviour of the control loop at the limit of stability. These parameters are initially set such that the control loop begins to oscillate. Critical characteristic values occurring allow one to deduce a favourable setting of the control parameters. A prerequisite for using this method is naturally that the control loop is permitted to oscillate.

Procedure

- Set the controller to P control (i.e. Tn = 999, Tv = 0), Kp initially small.
- Set the desired set point.
- Increase Kp until the controlled variable executes continuous, undamped oscillation.

The proportional action factor (amplifucatuib factor) set at the limit of stability is designated K_{crit} . The resulting oscillation period is designated T_{krit} .

Curve of controller output at the limit of stability

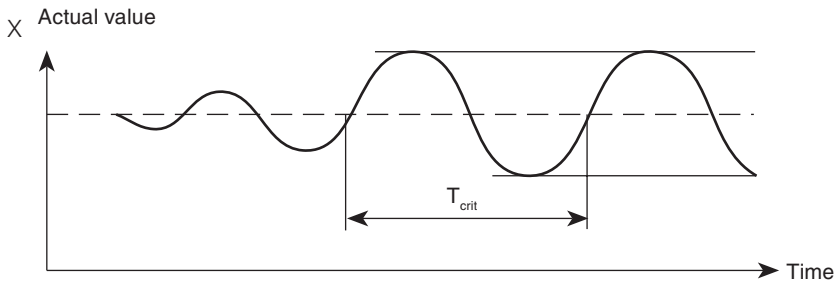

From K_{crit} and T_{crit} the controller parameters can then be calculated using the following table.

Parameter setting according to Ziegler and Nichols

Contr. type	Einstellung der Parameter		
P	Kp = 0.5 K_{crit}	-	-
PI	Kp = 0.45 K_{crit}	Tn = 0.85 T_{crit}	-
PID	Kp = 0.6 K_{crit}	Tn = 0.5 T_{crit}	Tv = 0.12 T_{crit}

The adjustment rules of Ziegler and Nichols have been determined for P members with first order time increase and dead time. However, they apply only for controllers with disturbance behaviour and not for those with command behaviour.

MAN 1000010084 EN Version: K Status: RL (released | freigegeben) printed: 23.04.2009

Setting rules of Chien, Hrones and Reswick (controller output step method)

With this method the controller parameters are set on the basis of the transient behaviour of the controlled member. A step in the controller output of 100 % is delivered. The times Tu and Tg are derived from the curve of the actual value of the controlled variable.

Curve of the controlled variable after a step in controller output ΔY

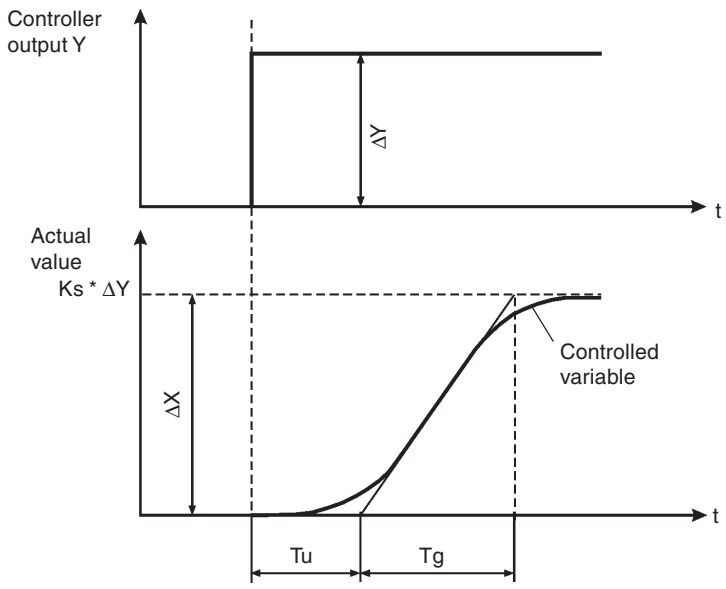

Procedure

- Switch controller to MANUAL.
- Deliver a step in controller output and register the controlled variable with a chart recorder.
- With critical runs (e.g. on risk of overheating), switch off in good time.

NOTE It should be observed that with thermally sluggish systems, the axtual value of the controlled variable may continue to rise after switching off.

In the following table, the setting values are given for the controller parameters as a function of Tu, Tg and Ks for command and disturbance behaviour, as well as for an aperiodic control event and a control event with 20% overswing. They apply for members with P behaviour, with dead time and with first-order delay.

MAN 1000010084 EN Version: K Status: RL (released | freigegeben) printed: 23.04.2009

Parameter setting according to Chien, Hrones and Reswick

Controlle type	Parameter setting			
	with aperiodic control event (0 % overswing)		with control event (with 20 % overswing)	
	Command	Disturbance	Command	Disturbance
P	$Kp = 0{,}3 \frac{Tg}{Tu*Ks}$	$Kp = 0{,}3 \frac{Tg}{Tu*Ks}$	$Kp = 0{,}7 \frac{Tg}{Tu*Ks}$	$Kp = 0{,}7 \frac{Tg}{Tu*Ks}$
PI	$Kp = 0{,}35 \frac{Tg}{Tu*Ks}$ $Tn = 1{,}2\ Tg$	$Kp = 0{,}6 \frac{Tg}{Tu*Ks}$ $Tn = 4 \cdot Tu$	$Kp = 0{,}6 \frac{Tg}{Tu*Ks}$ $Tn = Tg$	$Kp = 0{,}7 \frac{Tg}{Tu*Ks}$ $Tn = 2{,}3 \cdot Tu$
PID	$Kp = 0{,}6 \frac{Tg}{Tu*Ks}$ $Tn = Tg$ $Tv = 0{,}5 \cdot Tu$	$Kp = 0{,}95 \frac{Tg}{Tu*Ks}$ $Tn = 2{,}4 \cdot Tu$ $Tv = 0{,}42 \cdot Tu$	$Kp = 0{,}95 \frac{Tg}{Tu*Ks}$ $Tn = 1{,}35 \cdot Tg$ $Tv = 0{,}47 \cdot Tu$	$Kp = 1{,}2 \frac{Tg}{Tu*Ks}$ $Tn = 2 \cdot Tu$ $Tv = 0{,}42 \cdot Tu$

The proportional action factor Ks of the controlled member is obtained according from:

$$Ks = \frac{\Delta X}{\Delta Y}$$

OPERATING STRUCTURE

(APPENDIX)

MAN 1000010084 EN Version: K Status: RL (released | freigegeben) printed: 23.04.2009

Operating structure of the TOP Control Continuous

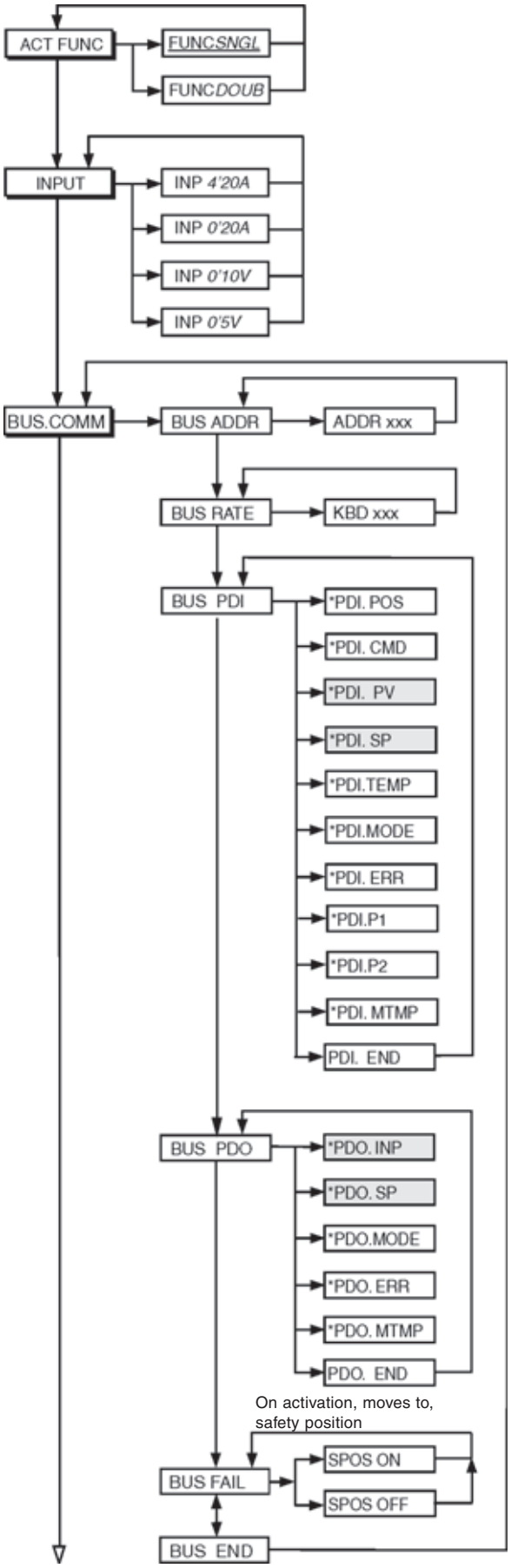

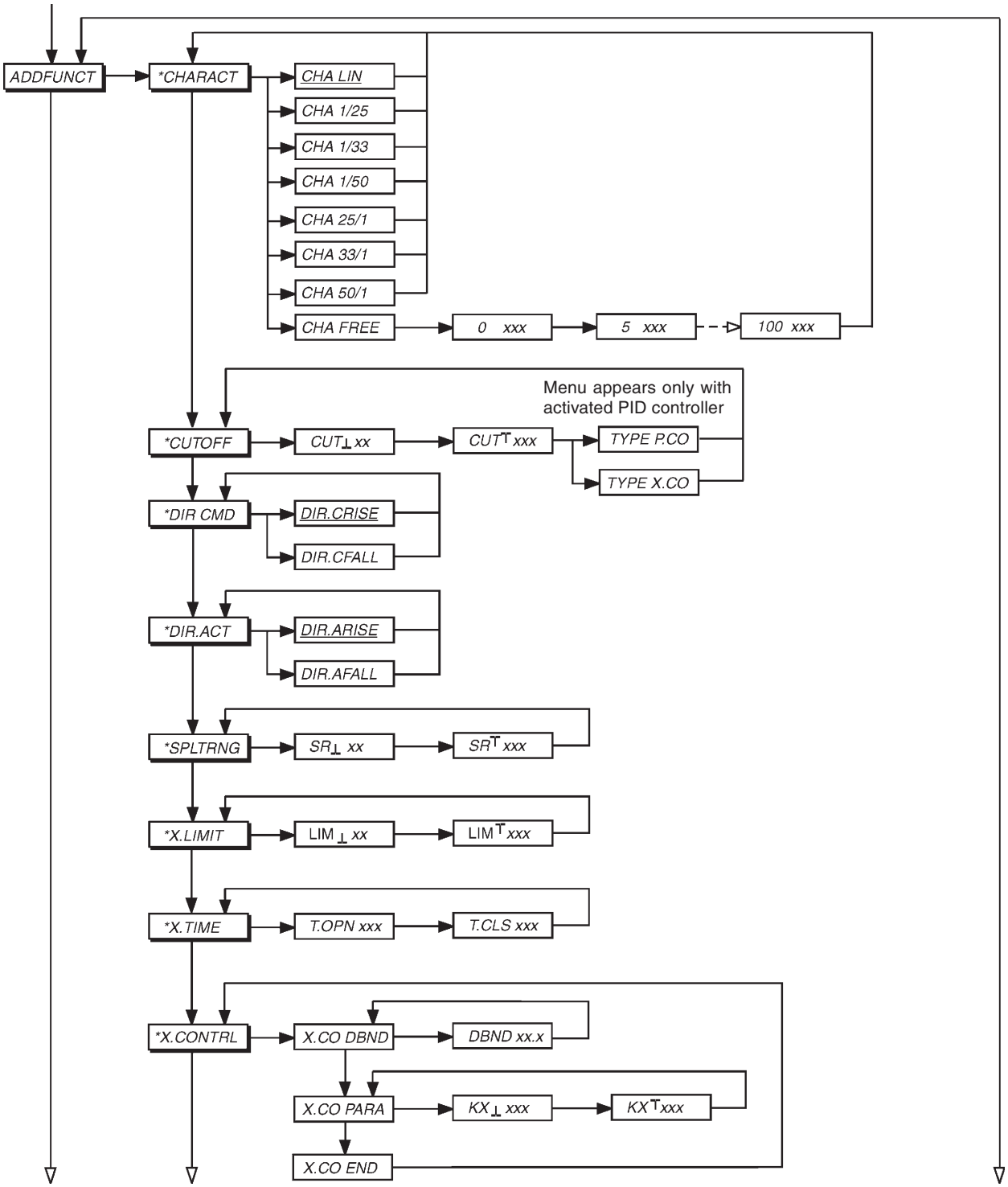

MAN 1000010084 EN Version: K Status: RL (released | freigegeben) printed: 23.04.2009

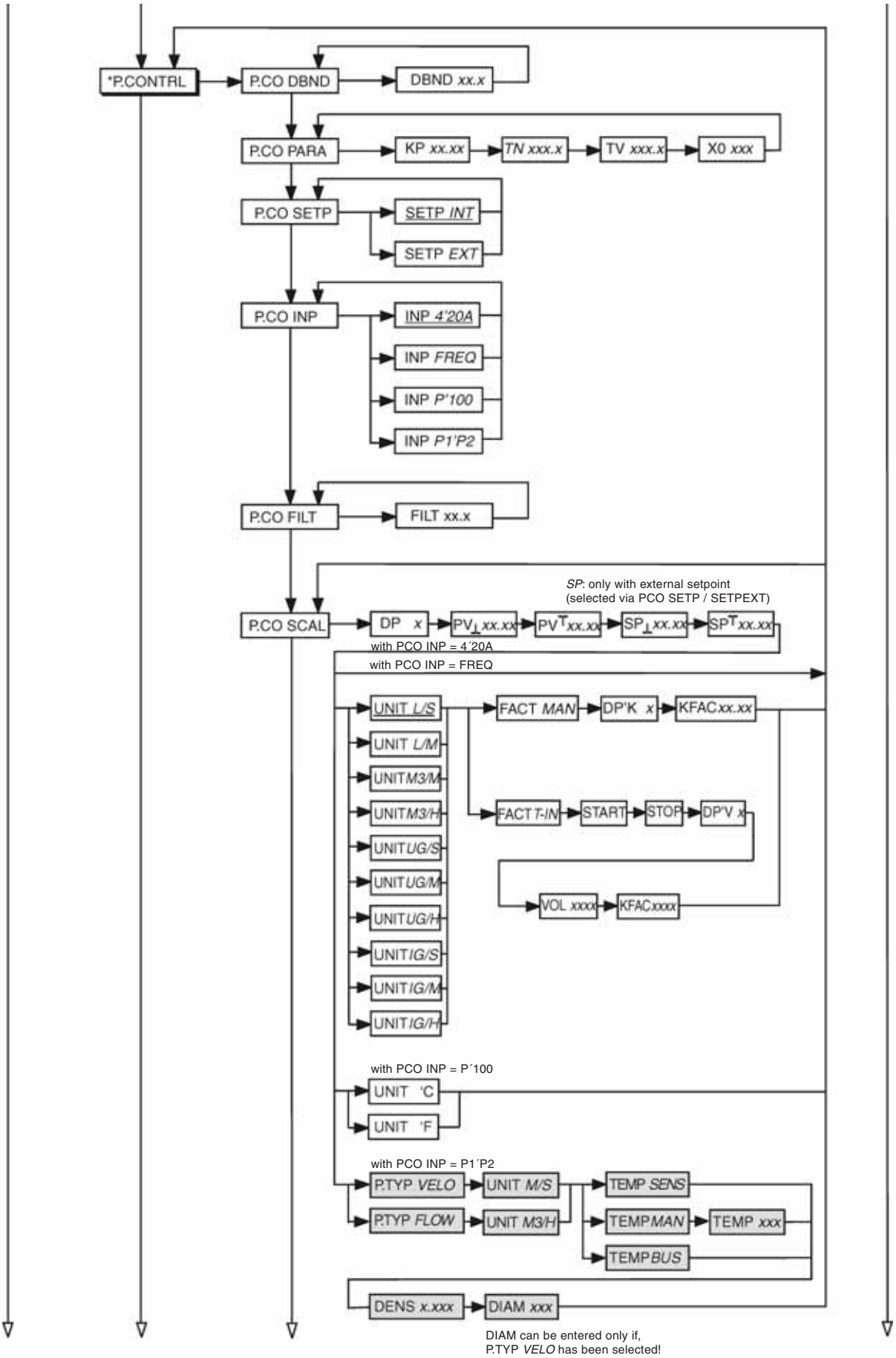

MAN 1000010084 EN Version: K Status: RL (released | freigegeben) printed: 23.04.2009

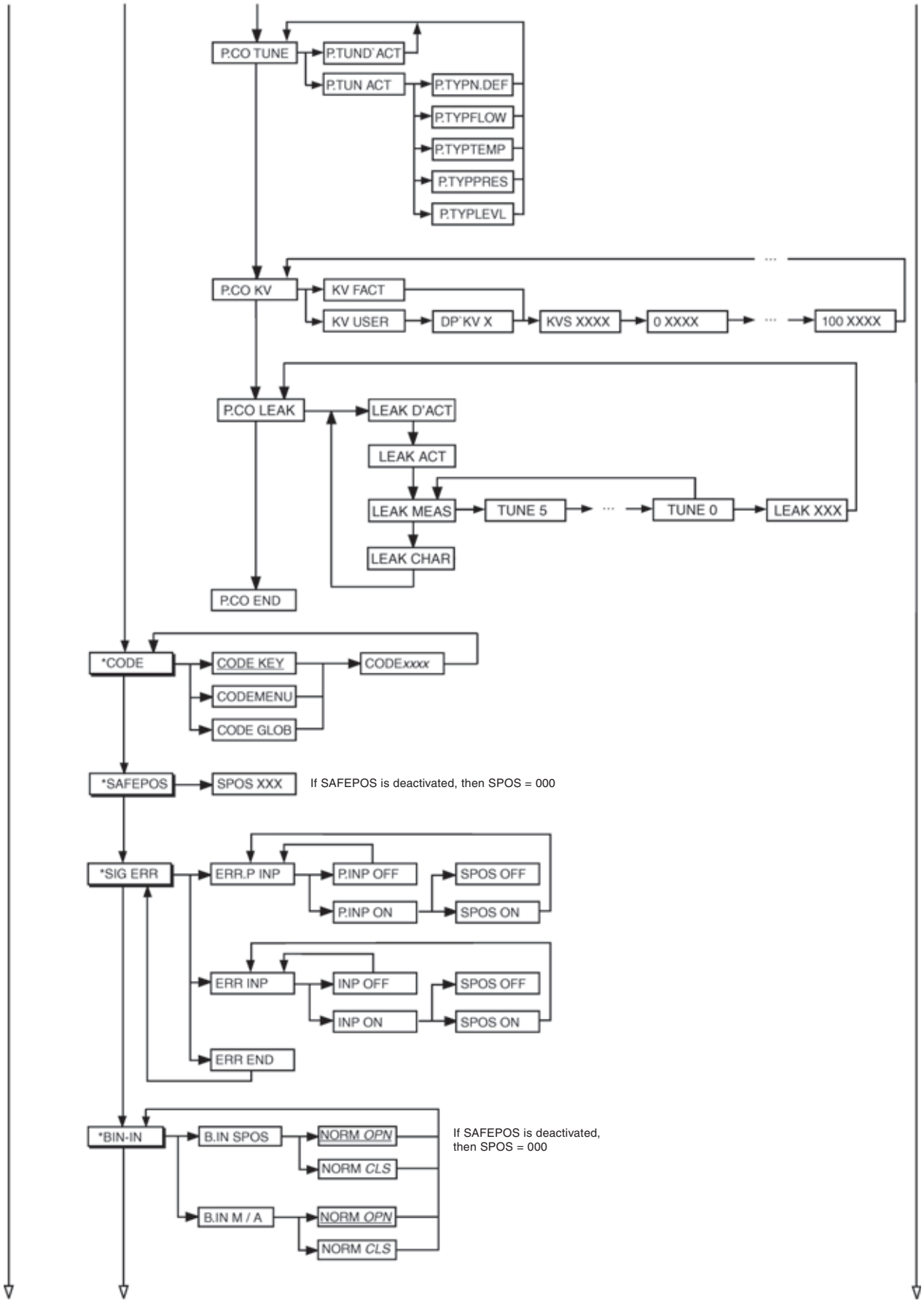

MAN 1000010084 EN Version: K Status: RL (released | freigegeben) printed: 23.04.2009

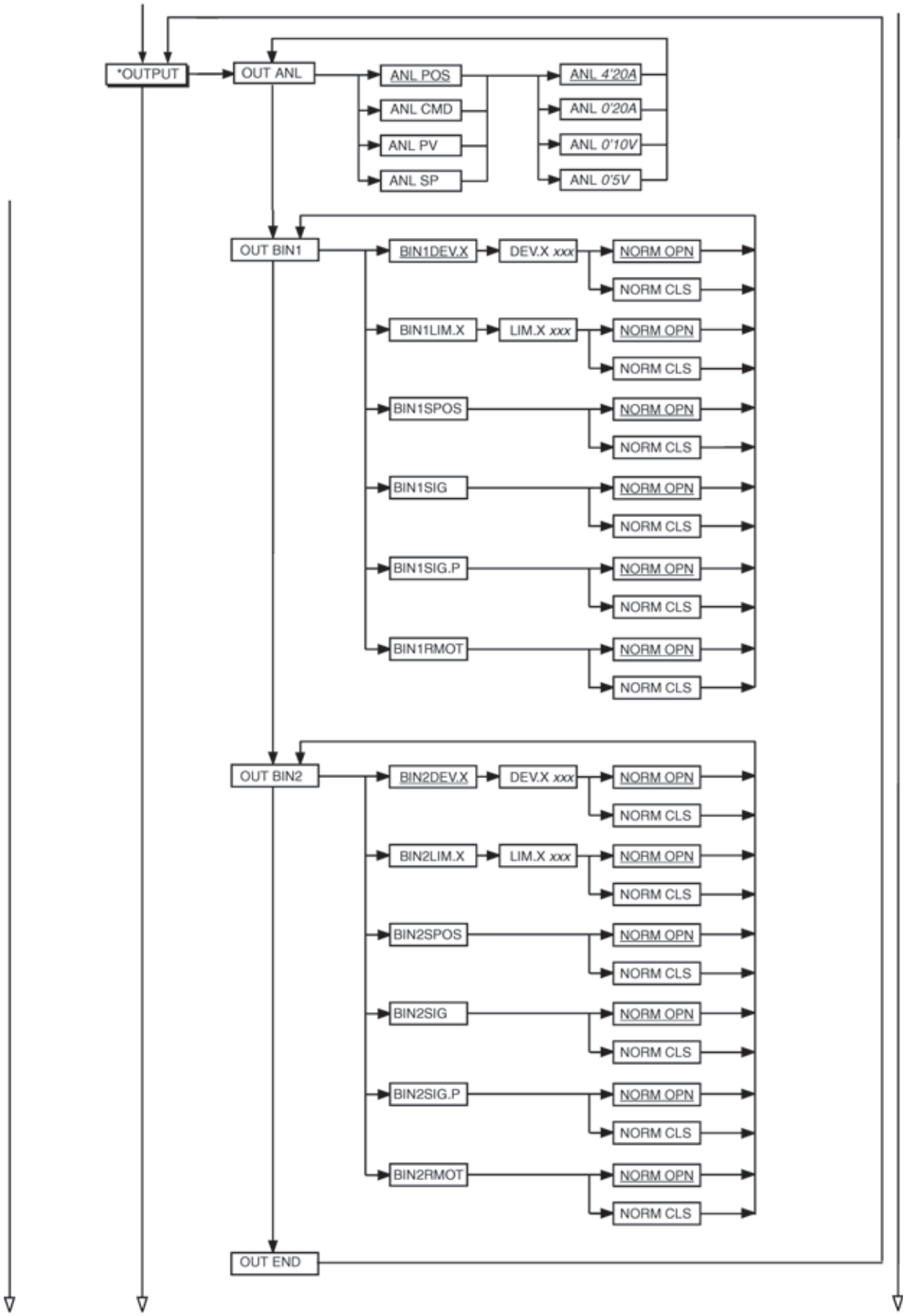

MAN 1000010084 EN Version: K Status: RL (released | freigegeben) printed: 23.04.2009

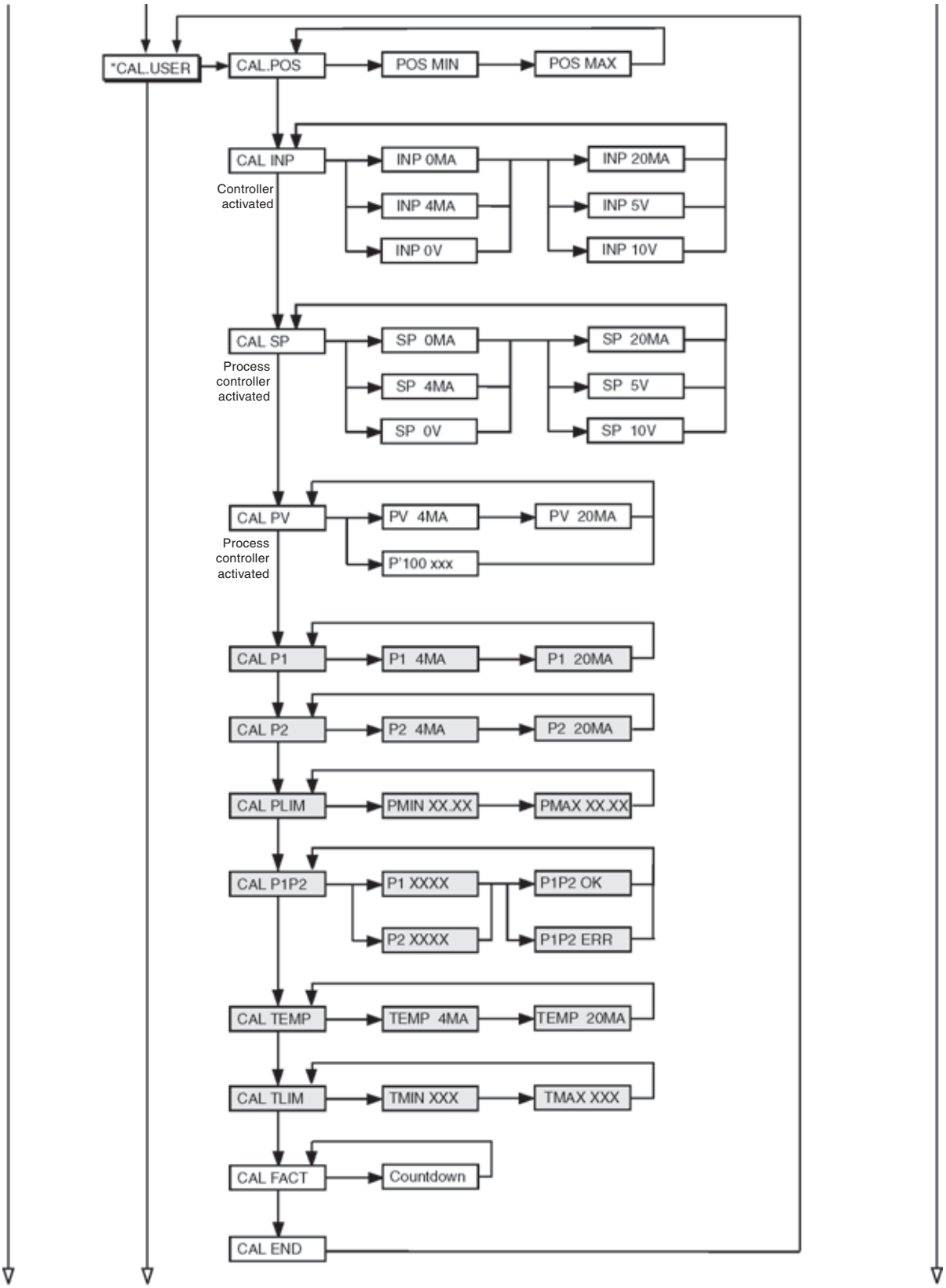

MAN 1000010084 EN Version: K Status: RL (released | freigegeben) printed: 23.04.2009

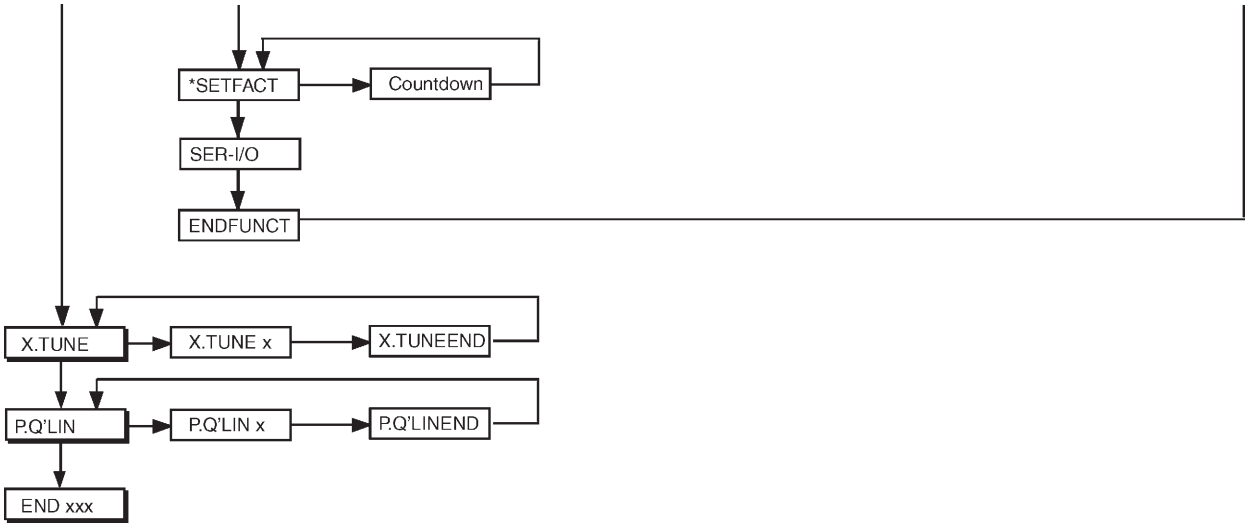

MAN 1000010084 EN Version: K Status: RL (released | freigegeben) printed: 23.04.2009

TABLES FOR POSITIONER

(APPENDIX)

MAN 1000010084 EN Version: K Status: RL (released | freigegeben) printed: 23.04.2009

Tables for noting your setting on the positioner

Settings of the freely programmable characteristic

Ref. point (Set point of position in %)	Valve stroke [%]			
	Date:	Date:	Date:	Date:
0				
5				
10				
15				
20				
25				
30				
35				
40				
45				
50				
55				
60				
65				
70				
75				
80				
85				
90				
95				
100				

MAN 1000010084 EN Version: K Status: RL (released | freigegeben) printed: 23.04.2009

TABLES FOR PROCESS CONTROLLER

(APPENDIX)

MAN 1000010084 EN Version: K Status: RL (released | freigegeben) printed: 23.04.2009

Tables for noting your settings on the process controller

Settings of the freely programmable characteristic

Ref. point (Set point of position in %)	Valve stroke [%]			
	Date:	Date:	Date:	Date:
0				
5				
10				
15				
20				
25				
30				
35				
40				
45				
50				
55				
60				
65				
70				
75				
80				
85				
90				
95				
100				

Parameters set on the process controller

	Date:	Date:	Date:	Date:
KP				
TN				
TV				
X0				
DBND				
DP				
PV ⊥				
PV ⊤				
SP ⊥				
SP ⊤				
UNIT				
KFAC				
FILT				
INP				

MAN 1000010084 EN Version: K Status: RL (released | freigegeben) printed: 23.04.2009

MASTERCODE
(APPENDIX)

MAN 1000010084 EN Version: K Status: RL (released | freigegeben) printed: 23.04.2009

MAN 1000010084 EN Version: K Status: RL (released | freigegeben) printed: 23.04.2009

MASTERCODE

7175

Contact addresses / Kontaktadressen

Germany / Deutschland / Allemange

Bürkert Fluid Control System
Sales Centre
Chr.-Bürkert-Str. 13-17
D-74653 Ingelfingen
Tel. + 49 (0) 7940 - 10 91 111
Fax + 49 (0) 7940 - 10 91 448
E-mail: info@de.buerkert.com

International

Contact addresses can be found on the internet at:

Die Kontaktadressen finden Sie im Internet unter:

Les adresses se trouvent sur internet sous :

www.burkert.com ➔ Bürkert ➔ Company ➔ Locations

MAN 1000010084 EN Version: K Status: RL (released | freigegeben) printed: 23.04.2009

MAN 1000010084 EN Version: K Status: RL (released | freigegeben) printed: 23.04.2009

The smart choice
of Fluid Control Systems
www.buerkert.com

bürkert
Fluid Control Systems