FINE CONTROLS (UK) LTD

Fine Controls have been supplying process controls & instrumentation equipment since 1994, & now serves an ever expanding customer base, both in the UK & globally.

We offer a full range of valve & instrumentation products & services, with our product rangerepresenting leading technologies & brands:

Flow: Flow Meters & Transmitters, Flow Switches, Flow Control Valves & Batch Control Systems

Temperature: Temperature Probes & Thermowells, Temperature ransmitters,Temperature Regulators & Temperature Displays

Level: Level Transmitters & Switches

Pressure: Pressure Gauges &Transmitters, Precision & High Pressure Regulators & I-P Converters, Volume boosters.

Precision Pneumatics: Pressure Regulators, I-P Converters, Volume Boosters, Vacuum Regulators

Valves: Solenoid & Pneumatic Valves, Control Valves & Positioners, Actuated Ball, Globe or Diaphragm Valves & Isolation Valves

Services: Repair, Calibration, Panel Build, System Design & Commissioning

A rotork Brand FAIRCHILD

bürkert

SIEMENS

alcon SOLENOID VALVES A rotork Brand

MIDLAND-ACS A rotork Brand

Honeywell

Bourdon Baumer Group

SOLDO CONTROLS A rotork Brand

Fine Controls (UK) LTD, Bassendale Road, Croft Business Park,
Bromborough, Wirral, CH62 3QL UK
Tel: 0151 343 9966
Email: sales@finecontrols.com

POWERED ISOLATING CONVERTOR

SEM1100

- VOLTAGE OR CURRENT INPUTS
- VOLTAGE OR CURRENT OUTPUTS
- POWERS INPUT AND OUTPUT LOOPS
- DRIVES CURRENT INTO 1K Ω
- 3 PORT GALVANIC ISOLATION
- DIN RAIL OR SURFACE MOUNT
- SELECTABLE INPUT AND OUTPUT

INTRODUCTION

The SEM1100 is a powered isolating converter that accepts most common high level process signals (current and voltage), isolates them electrically and physically, and converts them to any other process signal. It is also possible to have voltage and current outputs simultaneously from a single input.

The isolator is available in AC and DC powered versions, both generating loop excitation for input and output loops at the same time.

Zero and span adjustment potentiometers are conveniently situated on the front panel together with a power ON LED. Configuration (factory set if specified) can easily be changed by means of internal switches and the use of suitable equipment.

SPECIFICATIONS @ 20 °C

INPUT		
Current		(4 to 20) mA, (0 to 20) mA Active or Passive (40 mA maximum)
Voltage		(0 to 100) mV, (0 to 1) mV, (0 to 5) mV, (0 to 10) V or (20 to 100)mV, (0.2 to 1) V, (1 to 5) V, (2 to 10) V (20 V maximum)
Selection		Internal switches
Impedance		Voltage > 1 MΩ Current < 50 Ω
Protection		Reverse connection/over voltage
Loop Supply		25 V @ 25 mA Nominal (available for input transmitter 27 V maximum)
OUTPUT		
Current*1		(4 to 20) mA, (0 to 20) mA Active or Passive
Voltage*2		(0 to 1) V, (0 to 5) V, (0 to 10) V*2, (0.2 to 1) V, (1 to 5) V, (2 to 10) V*3
Selection		Internal switches
Load	Current	(0 to 1) KΩ
	Voltage	maximum current 5 mA
Linearity		0.05 % FRO
Stability		0.02 %/°C
Adjustment*4		Zero span potentiometer plus internal switches

*NOTES:
1. Current and voltage outputs are not isolated from each other
2. Available simultaneously with (0 to 20) mA output
3. Available simultaneously with (4 to 20) mA output
4. Adjustment affects both Voltage and Current output

Supply	S1	(90 to 253) VAC (50 to 60) Hz or
	S2	(20 to 35) VDC
Power Consumption		4 Watt maximum
Indication		Power on LED
Response Time		< 100 ms for 70 % of final reading
Protection		Internal Fuse 500 mA (T)
Input/Output Breakdown Isolation		500 VDC (flash tested @ 1 kV)
Supply		Flash tested @ 3 kV
MECHANICAL		
Mounting		DIN rail EN50022-35 or surface mount
Ambient		(0 to 50) °C; (10 to 95) % RH non condensing
Connections		Captive terminal screws
Cable size		1 mm² maximum
Flammability		UL94: V-0; VDE 0304 STEP 11b
Dimensions		(82 x 22.5 x 99) mm
Adjustments		Zero and Span Potentiometers Plus internal switches
APPROVALS		
EMC		BS EN61326

STATUS INSTRUMENTS

POWERED ISOLATING CONVERTOR

CONFIG. RANGES AVAILABLE SET WITH INTERNAL SWITCHES

INPUT
(4 to 20) mA Passive
(4 to 20) mA Active
(0 to 20) mA Passive
(0 to 20) mA Active
(0 to 100) mV
(20 to 100) mV
(0 to 1) V
200 mV to 1 V
(0 to 5) V
(1 to 5) V
(0 to 10) V
(2 to 10) V

OUTPUT	
VOLTAGE	CURRENT
(0 to 1) V	(0 to 20) mA
200 mV to 1 V	(4 to 20) mA
(0 to 5) V	(0 to 20) mA
(1 to 5) V	(4 to 20) mA
(0 to 10) V	(0 to 20) mA
(2 to 10) V	(4 to 20) mA

Default Range:
(4 to 20) mA Input
(4 to 20) mA and (1 to 5) V output

BLOCK DIAGRAM

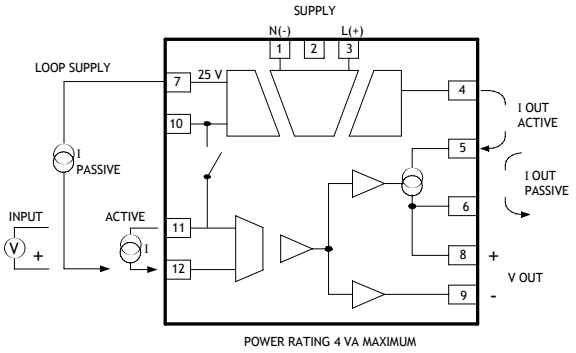

MECHANICAL DETAILS

(All dimensions in mm)

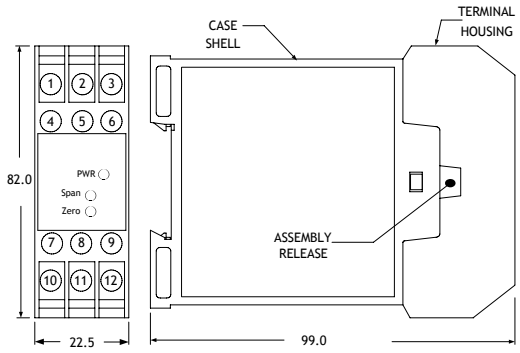

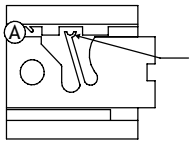

Non DIN rail attachment latch. Locate slide out mounting feet. insert screwdriver and twist anti-clockwise to allow latch to pass mounting and rest at position (A), repeat for other foot.

This view shows feet in surface mount position

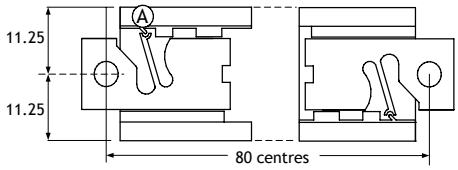

TYPICAL APPLICATION

In this application the SEM1100 provides power for both input and output loops. isolation is provided allowing the TC to be grounded.

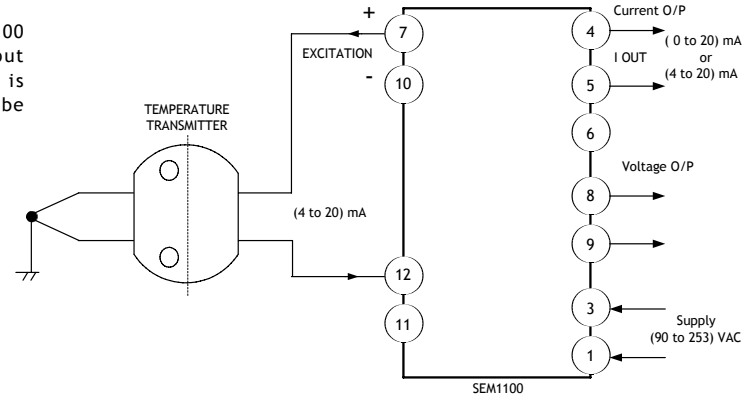

ORDER CODE

SEM1100	/		/	IN / OUT

(90 to 253) VAC Powered (50 to 60) Hz	S1
(20 to 35) VDC Powered or (22 to 28) VAC, (50 to 60) Hz	S2

See Config. ranges ((4 to 20) mA INPUT (4 to 20) mA OUTPUT default)

Status Instruments Ltd
Green Lane Business Park
Green Lane, Tewkesbury
Gloucestershire, UK
GL20 8DE

Tel: +44 (0)1684 296818
Fax: +44 (0)1684 293746
Email: sales@status.co.uk
Website: www.status.co.uk

52-215-2197-01 Issue 04

STATUS INSTRUMENTS